May 19, 1959 S. BROADBENT 2,887,127

FLUID CONTROL VALVES

Filed May 10, 1954 2 Sheets-Sheet 1

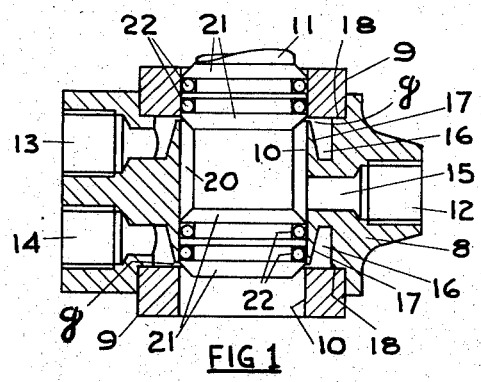

FIG 1

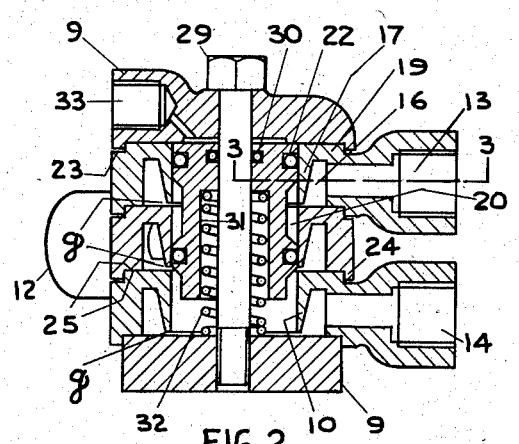

FIG 2

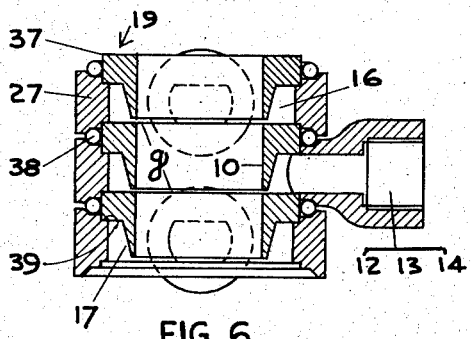

FIG 6

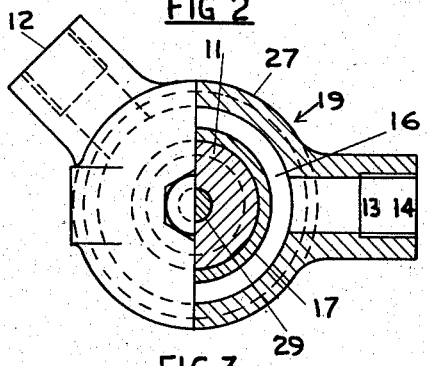

FIG 3

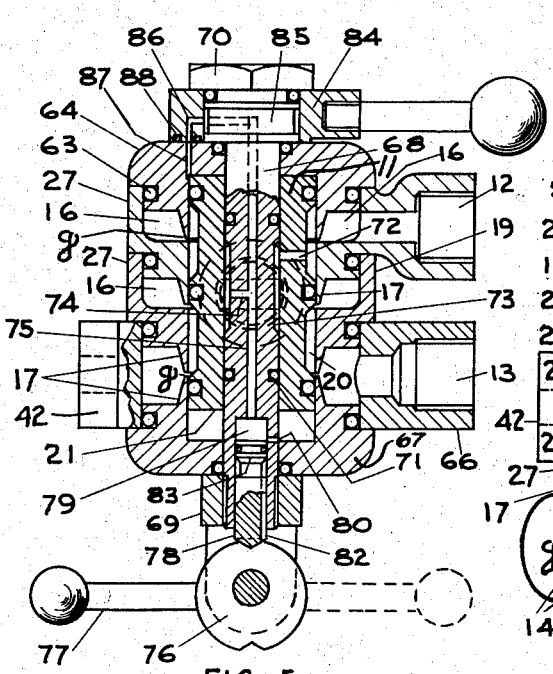

FIG 5

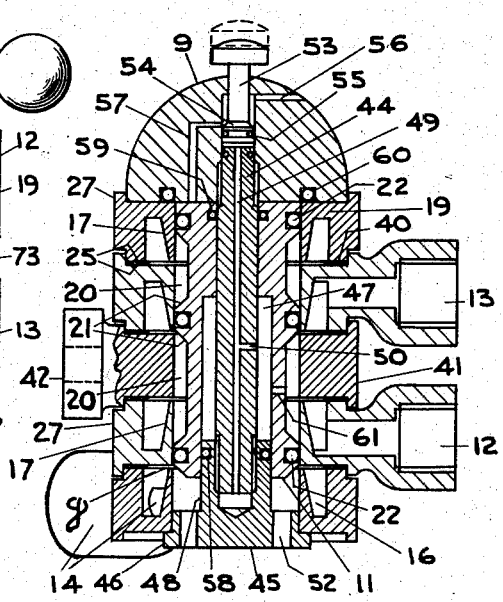

FIG 4

Sidney Broadbent