US005281227A

United States Patent [19]

Sussman

[11] Patent Number: 5,281,227

[45] Date of Patent: Jan. 25, 1994

[54] LENS CASE WITH IOL FOLDING DEVICE

[75] Inventor: Glenn Sussman, Lake Forest, Calif.

[73] Assignee: Allergan, Inc., Irvine, Calif.

[21] Appl. No.: 973,438

[22] Filed: Nov. 9, 1992

[51] Int. Cl.[5] A61B 17/00; A61F 9/00

[52] U.S. Cl. 606/107; 128/898; 206/5.1

[58] Field of Search 206/5, 5.1, 6, 438; 606/1, 107; 623/4, 6; 128/897, 898

[56] References Cited

U.S. PATENT DOCUMENTS

4,173,281	11/1979	Trought	206/5.1
4,257,521	3/1981	Poler .	
4,269,307	5/1981	LaHaye	206/5.1
4,615,703	10/1986	Callahan et al.	606/107
4,697,697	10/1987	Graham et al. .	
4,736,836	4/1988	Alongi et al. .	
4,906,247	3/1990	Fritch .	
4,911,158	3/1990	Weatherly .	
5,007,913	4/1991	Dulebohn et al. .	
5,100,410	3/1992	Dulebohn .	
5,171,241	12/1992	Buboltz et al.	606/107
5,176,686	1/1993	Poley	606/107
5,190,553	3/1993	Kanert et al.	606/107

FOREIGN PATENT DOCUMENTS

4039119 9/1991 Fed. Rep. of Germany .

OTHER PUBLICATIONS

"Folding Techniques for the AMO SI-30 Intraocular Lens", 3 pages.

Primary Examiner—Stephen C. Pellegrino
Assistant Examiner—Glenn K. Dawson
Attorney, Agent, or Firm—Gordon L. Peterson

[57] ABSTRACT

A lens case for an intraocular lens having a deformable optic, including a folder for receiving the intraocular lens and folding the deformable optic about a fold axis. A retainer adjacent the folder holds the intraocular lens against substantial pivotal movement relative to the retainer about a pivot axis which is generally transverse to the fold axis. The folder and retainer are relatively pivotable about the pivot axis so that the orientation of the fold axis relative to the retainer and the deformable optic can be changed.
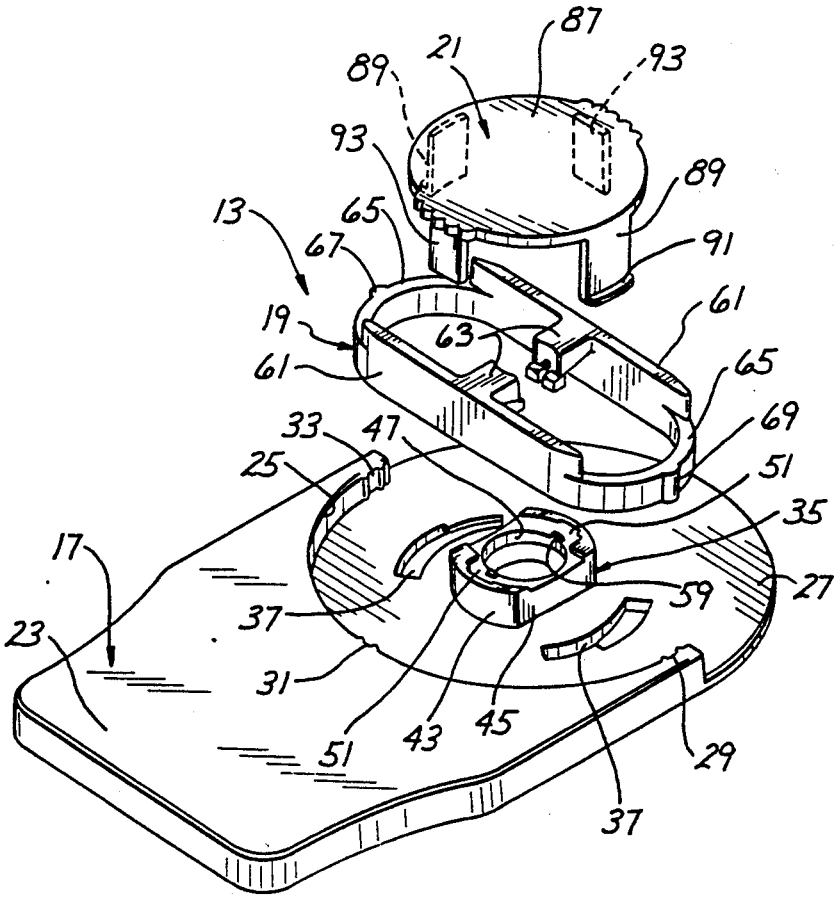
19 Claims, 4 Drawing Sheets