April 23, 1968 S. YANDO 3,379,927

PIEZOELECTRIC-ELECTROLUMINESCENT DISPLAY DEVICE
CONTAINING NONLINEAR RESISTANCE LAYER
Filed Sept. 2, 1964

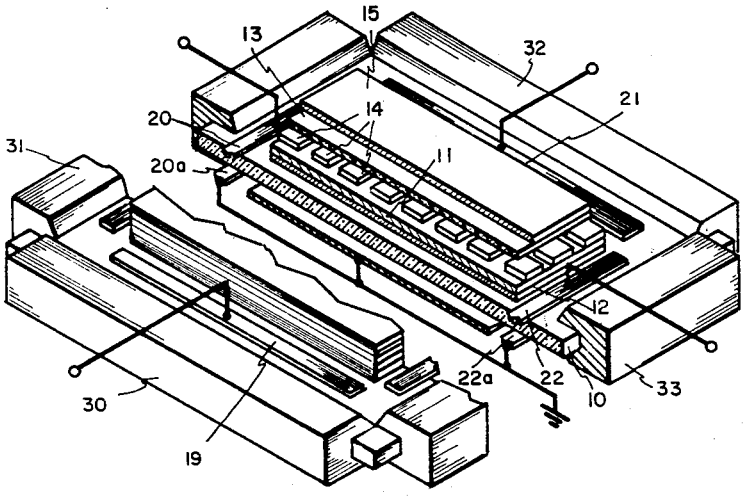

Fig. 1.

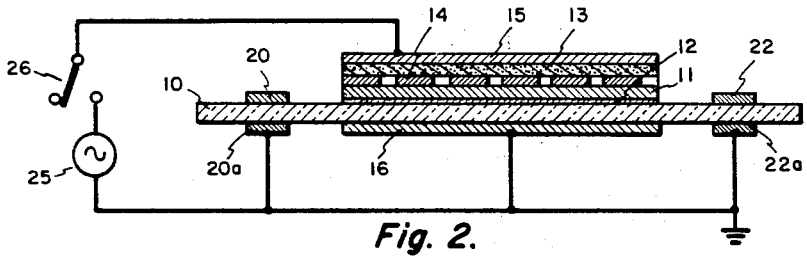

Fig. 2.

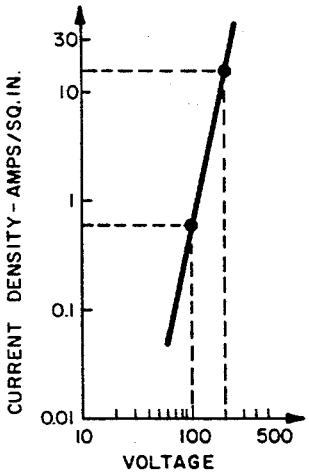

Fig. 3.

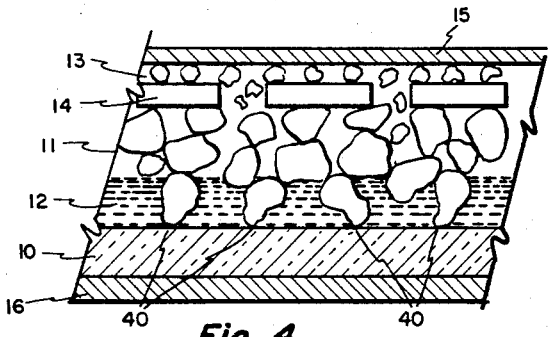

Fig. 4.

INVENTOR.
STEPHEN YANDO

BY R. J. Frank
ATTORNEY.