350-362 $$$ SR
E197Y OR 4,068,927
1 350/362

United States
White

4,068,927
Jan. 17, 1978

[54] **ELECTROPHORESIS DISPLAY WITH BURIED LEAD LINES**

[75] Inventor: **Roger Paul White,** Yonkers, N.Y.

[73] Assignee: **North American Philips Corporation,** New York, N.Y.

[21] Appl. No.: **719,604**

[22] Filed: **Sept. 1, 1976**

[51] **Int. Cl.**[2] ..... **G02F 1/19**
[52] **U.S. Cl.** ..... **350/160 R;** 313/513; 315/169 R; 340/336; 350/267
[58] **Field of Search** ..... 204/180, 299; 350/160 R, 267; 313/232, 358, 513; 315/169 R, 169 TV, 363; 340/324 R, 336

[56] **References Cited**

U.S. PATENT DOCUMENTS

| | | | |
|---|---|---|---|
| Re. 28,360 | 3/1975 | Evans et al. | 315/169 TV X |
| 3,756,693 | 9/1973 | Ota | 350/160 R |
| 3,772,013 | 11/1973 | Wells | 350/160 R X |
| 3,892,568 | 7/1975 | Ota | 340/336 X |
| 3,909,116 | 9/1975 | Kohashi | 350/267 |

*Primary Examiner*—Eugene R. La Roche
*Attorney, Agent, or Firm*—Frank R. Trifari; Norman N. Spain

[57] **ABSTRACT**

A multisegmented electrophoretic display such as a numerical display in which the lead lines are hidden from the observer's view and prevented from having a switching function by séparating the lead lines from the electrophoretic suspension by means of an insulating and a conducting layer.
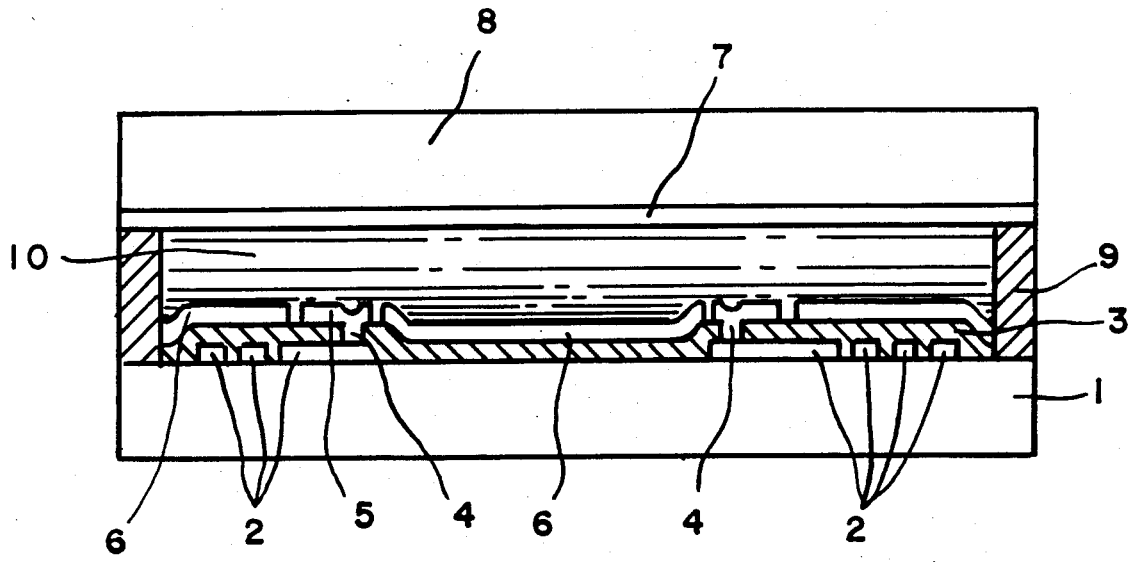
**7 Claims, 2 Drawing Figures**