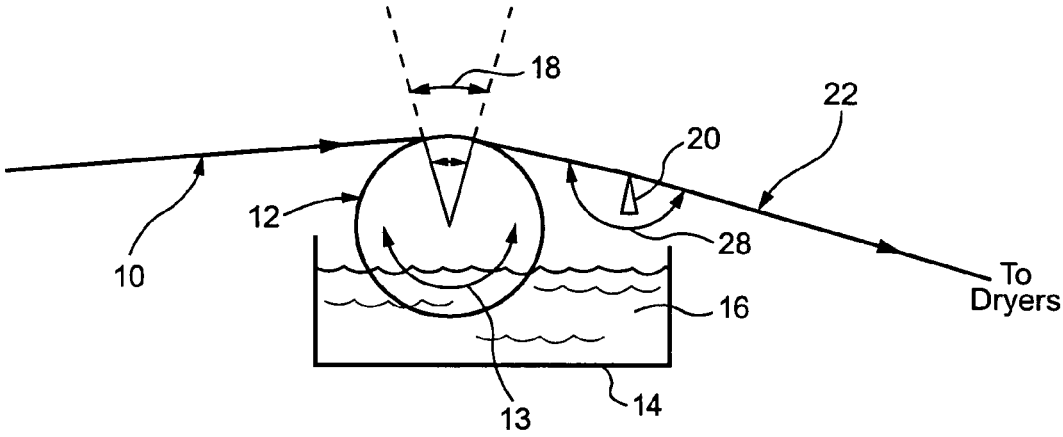

Fig. 1 (Prior Art)

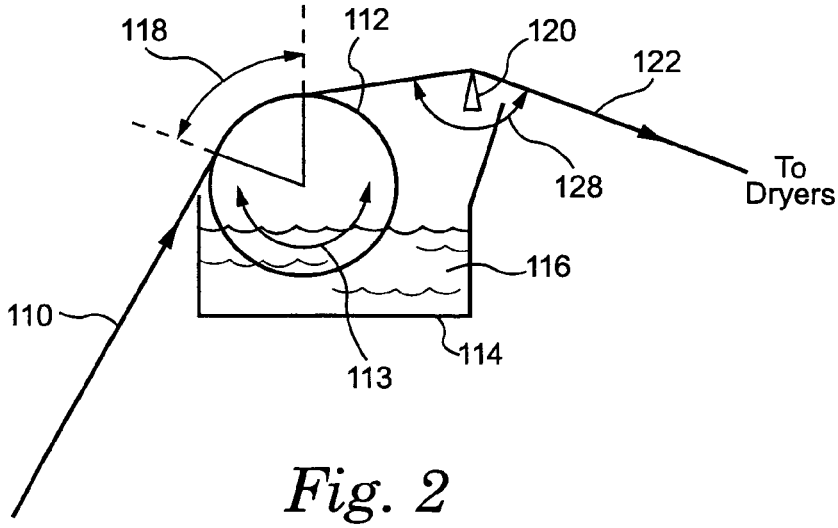

Fig. 2