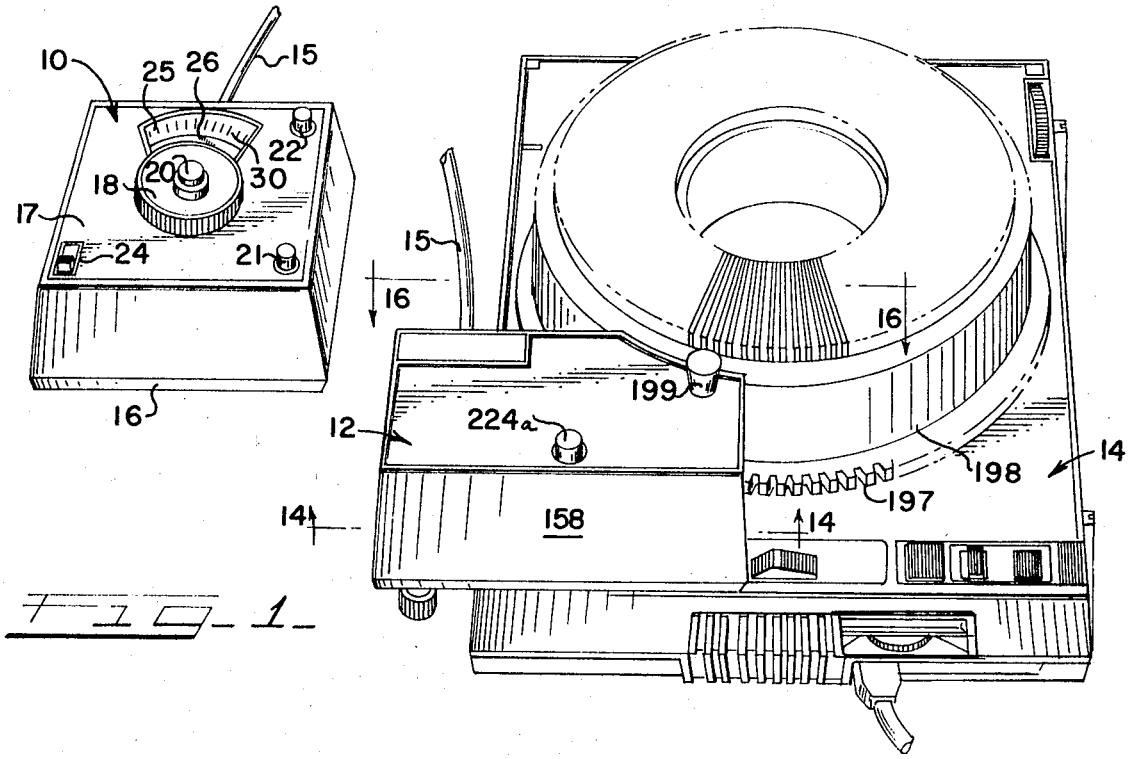

FIG. 1

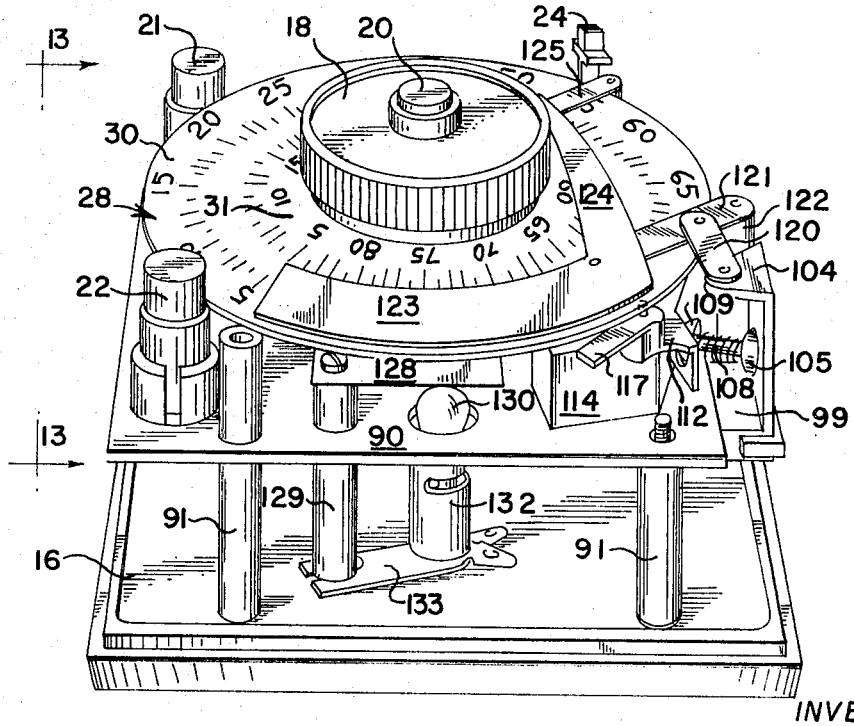

FIG. 2

INVENTOR
FRANK P. BENNET
BY Greist, Lockwood, Greenawalt + Dewey
ATT'YS.