Nov. 7, 1950 E. W. VOSE 2,528,927

SPRAYING DEVICE FOR LIQUIDS

Filed Dec. 7, 1944

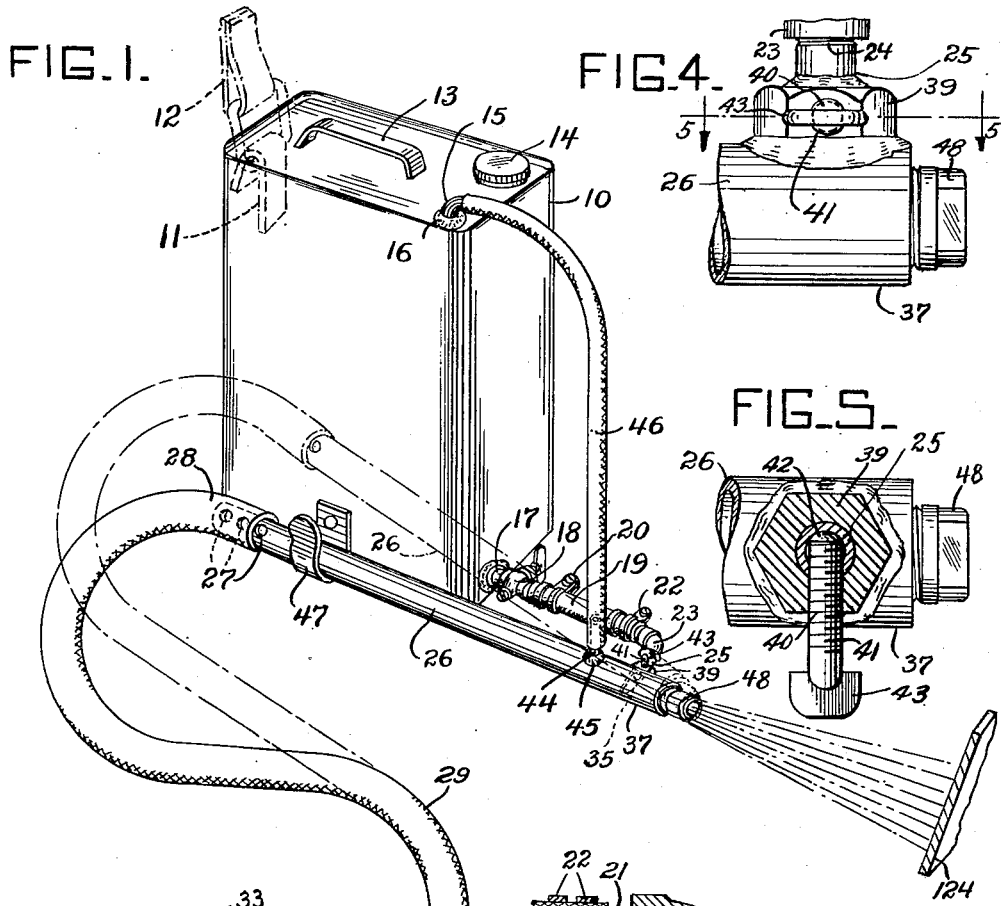

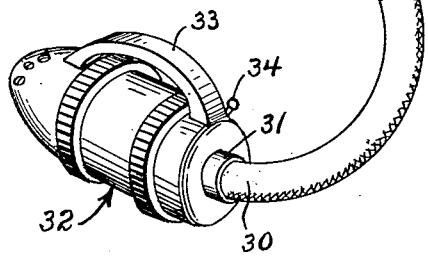

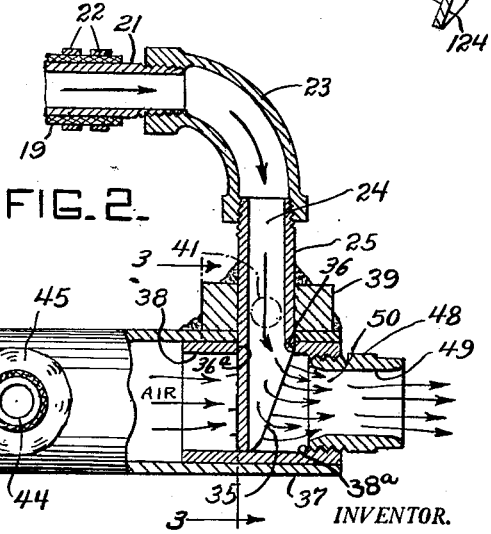

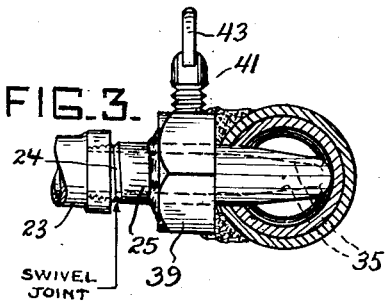

INVENTOR.
EDWIN W. VOSE
BY
Van Deventer & Grier
ATTORNEYS.