US007627927B2

(12) **United States Patent**
Blocker et al.

(10) **Patent No.: US 7,627,927 B2**
(45) **Date of Patent: Dec. 8, 2009**

(54) **VACUUM CLEANER WITH SENSING SYSTEM**

(75) Inventors: **Douglas L. Blocker**, Festus, MO (US); **John F. Kaido**, Arnold, MO (US); **T. Joy H. Petty**, St. Louis, MO (US)

(73) Assignee: **Tacony Corporation**, Fenton, MO (US)

(*) Notice: Subject to any disclaimer, the term of this patent is extended or adjusted under 35 U.S.C. 154(b) by 70 days.

(21) Appl. No.: **11/760,077**

(22) Filed: **Jun. 8, 2007**

(65) **Prior Publication Data**

US 2008/0301899 A1 Dec. 11, 2008

(51) **Int. Cl.**
A47L 9/30 (2006.01)

(52) **U.S. Cl.** **15/324**; 15/319; 15/339

(58) **Field of Classification Search** 15/319, 15/324, 339; *A47L 9/30*
See application file for complete search history.

(56) **References Cited**

U.S. PATENT DOCUMENTS

2,625,239	A		1/1953	Senne
2,715,452	A		8/1955	Kent
3,226,758	A	*	1/1966	Brown et al. 15/327.1
3,232,030	A		2/1966	Owenmark
3,510,904	A		5/1970	Lagerstrom
3,679,885	A		7/1972	Selley
3,936,904	A		2/1976	Bashark
3,984,735	A		10/1976	Schwartz
4,034,415	A		7/1977	Suer
4,083,001	A		4/1978	Paice
4,099,861	A		7/1978	Abel
4,195,254	A		3/1980	Gurwicz et al.
4,342,132	A		8/1982	Fromknecht
4,601,082	A		7/1986	Kurz
4,654,924	A		4/1987	Getz et al.
4,767,213	A		8/1988	Hummel
4,937,912	A		7/1990	Kurz
4,977,639	A		12/1990	Takahashi et al.
5,014,388	A		5/1991	Schiazza et al.
5,023,973	A		6/1991	Tsuchida
5,105,502	A		4/1992	Takashima
5,107,565	A		4/1992	Chun
5,136,750	A		8/1992	Takashima
5,243,732	A		9/1993	Koharagi et al.
5,301,385	A	*	4/1994	Abe et al. 15/319
5,373,598	A		12/1994	Weber
5,551,119	A		9/1996	Wörwag
5,561,346	A		10/1996	Byrne
5,608,944	A		3/1997	Gordon

(Continued)

FOREIGN PATENT DOCUMENTS

EP	0530026	3/1993

(Continued)

Primary Examiner—David A Redding
(74) *Attorney, Agent, or Firm*—Christopher R. Carroll; Dean D. Small; Small Patent Law Group

(57) **ABSTRACT**

A vacuum cleaner having a floor nozzle movable by a user of the vacuum cleaner over a floor to suction dirt from the floor. A sensing system is provided for sensing a condition relating to the vacuum cleaner and for generating a signal in response to the condition. A sensor-responsive light system on the floor nozzle is responsive to the signal for projecting light onto the floor for observance by the user.
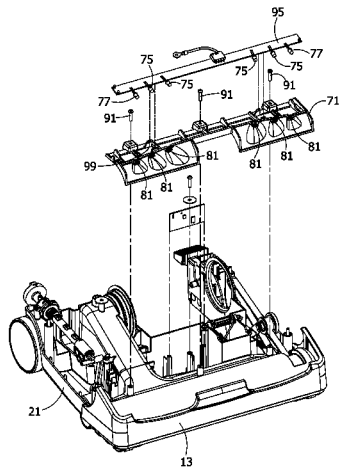
20 Claims, 13 Drawing Sheets