May 2, 1967 A. G. NIJHUIS 3,317,227

BUILDING STRUCTURE

Filed Aug. 23, 1965 2 Sheets-Sheet 1

FIG.1

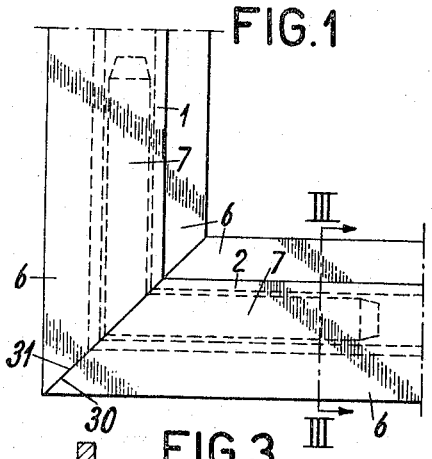

FIG.2

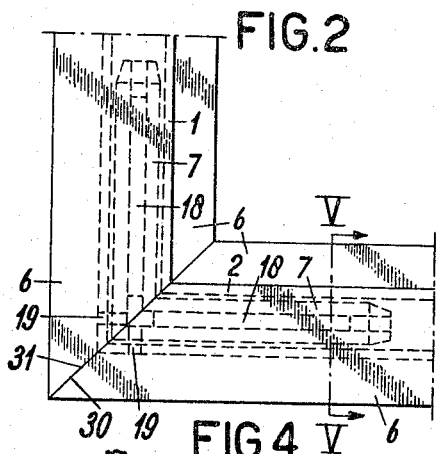

FIG.3

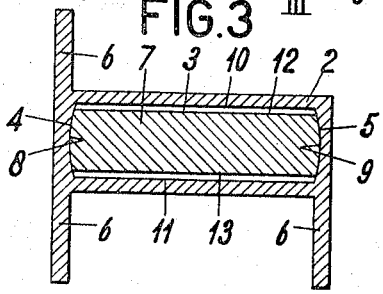

FIG.4

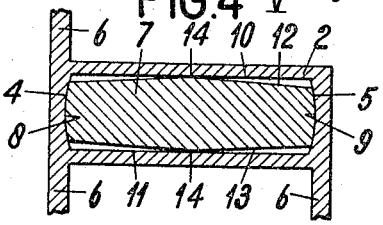

FIG.5

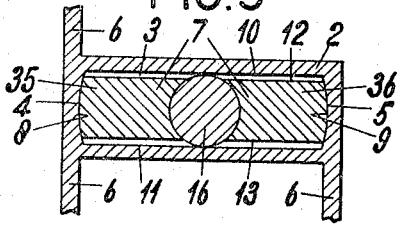

FIG.6

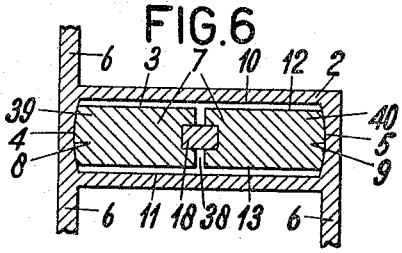

FIG.7

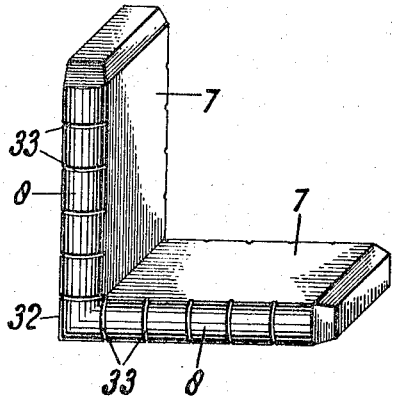
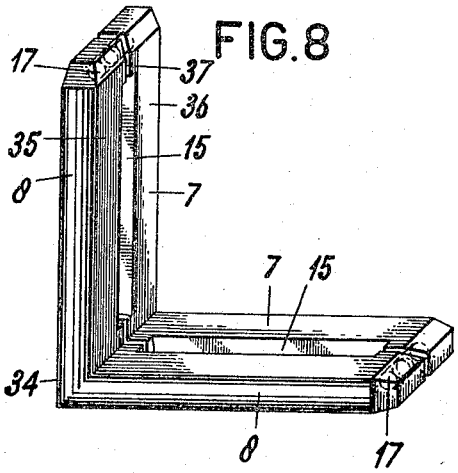
FIG.8