US008314927B2

(12) **United States Patent**
Choi et al.

(10) **Patent No.: US 8,314,927 B2**
(45) **Date of Patent: Nov. 20, 2012**

(54) **SYSTEMS AND METHODS FOR TESTING INTRAOCULAR LENSES**

(75) Inventors: **Steven Choi**, Mountain View, CA (US); **Terah Whiting Smiley**, San Francisco, CA (US); **Gregory Vinton Matthews**, San Francisco, CA (US)

(73) Assignee: **PowerVision, Inc.**, Belmont, CA (US)

(*) Notice: Subject to any disclaimer, the term of this patent is extended or adjusted under 35 U.S.C. 154(b) by 175 days.

(21) Appl. No.: **12/178,454**

(22) Filed: **Jul. 23, 2008**

(65) **Prior Publication Data**

US 2009/0027661 A1 Jan. 29, 2009

Related U.S. Application Data

(60) Provisional application No. 60/951,441, filed on Jul. 23, 2007.

(51) **Int. Cl.**
G01M 11/02 (2006.01)
G01M 11/08 (2006.01)
A61F 2/16 (2006.01)

(52) **U.S. Cl.** **356/124**; 356/124.5; 623/6.13; 623/6.22; 623/6.37

(58) **Field of Classification Search** 356/124–127; 351/210–213, 205, 206; 623/6.13, 6.22, 623/6.37, 6.34, 6.43, 6.44
See application file for complete search history.

(56) **References Cited**

U.S. PATENT DOCUMENTS

4,111,995 A 9/1978 Nelson
4,253,199 A 3/1981 Banko
4,254,509 A 3/1981 Tennant
4,304,895 A 12/1981 Loshaek
4,373,218 A 2/1983 Schachar
4,409,691 A 10/1983 Levy
4,423,809 A * 1/1984 Mazzocco 206/5.1
4,435,856 A 3/1984 L'Esperance
4,466,705 A 8/1984 Michelson
4,490,860 A 1/1985 Rainin
4,494,254 A 1/1985 Lopez
4,512,040 A 4/1985 McClure
4,528,311 A 7/1985 Beard et al.
4,575,373 A 3/1986 Johnson
4,585,457 A 4/1986 Kalb
4,604,295 A 8/1986 Humphreys
4,615,701 A 10/1986 Woods
4,620,954 A 11/1986 Singer et al.
4,685,921 A 8/1987 Peyman
4,685,922 A 8/1987 Peyman
4,693,717 A 9/1987 Michelson

(Continued)

FOREIGN PATENT DOCUMENTS

EP 0898972 A2 3/1999

(Continued)

OTHER PUBLICATIONS

Smiley et al.; U.S. Appl. No. 12/178,565 entitled "Lens delivery system," filed Jul. 23, 2008.

(Continued)

Primary Examiner — Sang Nguyen

(74) *Attorney, Agent, or Firm* — Shay Glenn LLP

(57) **ABSTRACT**

Systems and their methods of use for testing intraocular lenses outside of the lens capsule. In some embodiments the systems measure an accommodative response based on a force applied to the intraocular lens.
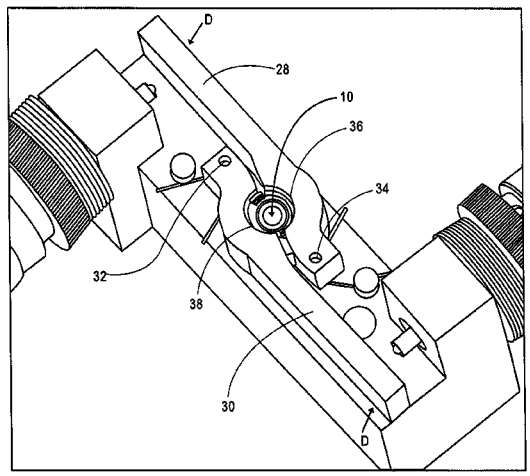
21 Claims, 9 Drawing Sheets