US009410427B2

(12) **United States Patent**
Giannakopoulos

(10) **Patent No.: US 9,410,427 B2**
(45) **Date of Patent: Aug. 9, 2016**

(54) **COMPRESSOR POWER AND TORQUE TRANSMITTING HUB**

(75) Inventor: **Konstantinos Panagiotis Giannakopoulos**, Middletown, CT (US)

(73) Assignee: **United Technologies Corporation**, Hartford, CT (US)

(*) Notice: Subject to any disclaimer, the term of this patent is extended or adjusted under 35 U.S.C. 154(b) by 949 days.

(21) Appl. No.: **13/489,168**

(22) Filed: **Jun. 5, 2012**

(65) **Prior Publication Data**

US 2013/0323077 A1 Dec. 5, 2013

(51) **Int. Cl.**
F01D 5/02 (2006.01)
F04D 29/054 (2006.01)
F04D 29/32 (2006.01)

(52) **U.S. Cl.**
CPC ***F01D 5/025*** (2013.01); ***F01D 5/026*** (2013.01); ***F04D 29/321*** (2013.01); *F05D 2260/403* (2013.01); *Y02T 50/671* (2013.01)

(58) **Field of Classification Search**
CPC F01D 9/042
See application file for complete search history.

(56) **References Cited**

U.S. PATENT DOCUMENTS

4,502,274 A * 3/1985 Girault F01D 25/18 184/6.11
5,307,622 A 5/1994 Ciokajlo et al.
5,433,674 A 7/1995 Sheridan et al.
5,813,214 A * 9/1998 Moniz F01D 25/18 415/175
6,223,616 B1 5/2001 Sheridan
6,464,401 B1 * 10/2002 Allard F16C 19/364 384/561
6,619,030 B1 9/2003 Seda et al.
6,739,120 B2 * 5/2004 Moniz F01D 5/022 60/226.1
7,296,398 B2 * 11/2007 Moniz F01D 1/26 60/226.1
7,458,202 B2 * 12/2008 Moniz F01D 25/18 60/226.1
7,591,754 B2 9/2009 Duong et al.
7,824,305 B2 11/2010 Duong et al.
7,849,668 B2 12/2010 Sheridan
7,926,260 B2 4/2011 Sheridan et al.
8,205,432 B2 6/2012 Sheridan
8,727,719 B2 * 5/2014 Belmonte et al. 415/209.2
2003/0163984 A1 * 9/2003 Seda F01D 9/041 60/226.1
2005/0106009 A1 5/2005 Cummings et al.
2008/0075590 A1 * 3/2008 Moniz F01D 5/066 415/229
2009/0090096 A1 4/2009 Sheridan

(Continued)

FOREIGN PATENT DOCUMENTS

EP 0747573 B1 8/2003
EP 1921253 A2 5/2008

(Continued)

OTHER PUBLICATIONS

Internation Search Report, Sep. 4, 2013, PCT/US2013/043878.

(Continued)

Primary Examiner — Eric Keasel
Assistant Examiner — Brian O Peters
(74) *Attorney, Agent, or Firm* — Kinney & Lange, P.A.

(57) **ABSTRACT**

A compressor hub includes a sleeve portion, a cone portion, and a mounting flange portion. The sleeve portion is cylindrical about a sleeve axis. The frustoconical cone portion is attached to the sleeve portion and diverges radially outward. In addition, the cone portion includes an inner cone portion with an inner generatrix and an outer cone portion with an outer generatrix that is colinear with the inner generatrix. The mounting flange portion is attached to the outer cone for attaching a rotor disk to the compressor hub.
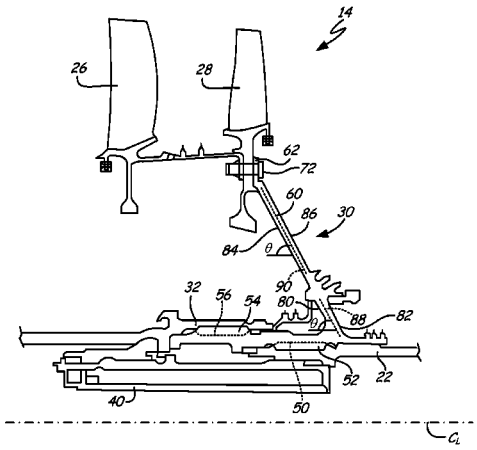
20 Claims, 5 Drawing Sheets