US006808727B2

(12) **United States Patent**
Kemeny

(10) **Patent No.: US 6,808,727 B2**
(45) **Date of Patent: Oct. 26, 2004**

(54) **MEAL-EQUIVALENT FOOD BAR**

(76) Inventor: **Emanuel S. Kemeny**, 1400 S. Joyce St. #602, Arlington, VA (US) 22202

(*) Notice: Subject to any disclaimer, the term of this patent is extended or adjusted under 35 U.S.C. 154(b) by 0 days.

(21) Appl. No.: **09/909,014**

(22) Filed: **Jul. 20, 2001**

(65) **Prior Publication Data**

US 2003/0017233 A1 Jan. 23, 2003

(51) **Int. Cl.**[7] **A23L 1/164**

(52) **U.S. Cl.** **426/76**; 426/87; 426/115; 426/120; 426/89; 426/93; 426/94

(58) **Field of Search** 426/76, 87, 115, 426/120, 94, 93, 89, 810; 424/467, 441

(56) **References Cited**

U.S. PATENT DOCUMENTS

395,243	A	*	12/1888	Maggi	426/87
428,502	A	*	5/1890	Maggi	426/89
1,174,826	A		3/1916	Chapman	
1,855,145	A		4/1932	Jones	
2,168,360	A		8/1939	Musher	
2,278,466	A	*	4/1942	Musher	426/89
2,538,202	A		1/1951	Kimball	
2,634,210	A		4/1953	Kimball	
3,336,139	A	*	8/1967	Mech et al.	
3,431,112	A	*	3/1969	Durst	426/89
3,869,555	A	*	3/1975	Heonis	426/594
3,882,253	A		5/1975	Schafer et al.	
3,892,867	A	*	7/1975	Schoonman	426/112
3,903,308	A	*	9/1975	Ode	426/93
4,055,669	A	*	10/1977	Kelly et al.	426/93
4,215,104	A	*	7/1980	Ullman et al.	426/76
4,313,961	A	*	2/1982	Tobia	
5,756,124	A	*	5/1998	Patel et al.	426/76
5,906,833	A		5/1999	Klatz	
6,143,335	A		11/2000	McKenzie	
6,572,904	B2	*	6/2003	Rhee	

FOREIGN PATENT DOCUMENTS

BE	1009616	*	6/1997	426/76
DE	20000935	*	10/2000	
EP	347014	*	12/1989	
GB	11608	*	11/1902	426/120
GB	21665	*	1/1908	426/589
GB	4093	*	10/1915	426/120
JP	57-194765	*	11/1982	426/76
WO	WO98/37768	*	9/1998	

OTHER PUBLICATIONS

Food Product Design, 8(4) 63–81 "Raising The Health & Energy Bar" (Dialog 00652604 Item 3, Fig 53), Jul. 1998.*

Convenience Store News, 36/10 "Quaker Oats" (Dialog 302870, Item 2, Fig 79), Aug. 7, 2000.*

Int'l New Product Report, p. 27 "Low Calorie Bars" (Dialog 207479 Item 3, Fig 79), Aug. 24, 1990.*

Int'l New Product Report (10) p. 15 "Diet Bars" (Dialog 204227 Item 4, Fig 79), May 18, 1990.*

Food Product Design 9(6) 101–125 "Bar Talk" (Dialog 00829484, Item 2, Fig 53), Sep. 1999.*

* cited by examiner

Primary Examiner—Steven L. Weinstein

(57) **ABSTRACT**

An improved meal-substitute food bar, herein called a meal-equivalent food bar because it is divided into segments equivalent to the sequence of courses in a conventional meal, including appetizer with functional appetite stimulants; main-course with major nutrition ingredients; and desert with functional appetite depressants. Further, the food bar is divided frangibly lengthwise into strips, each strip a selectable meal-equivalent with pre-determined calories. As a result, the meal-equivalent food bar provides a meal with improved physiological and psychological values for a consumer.
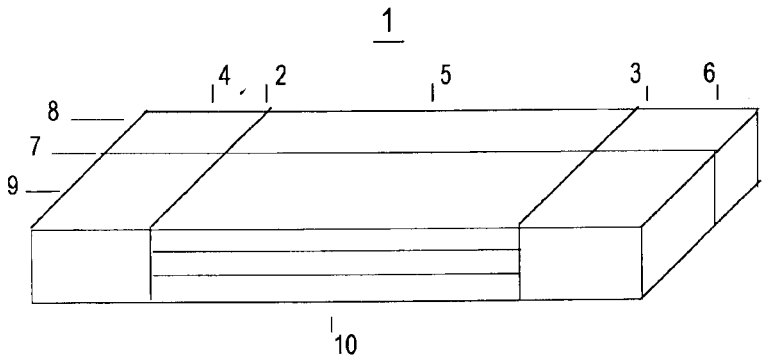
12 Claims, 1 Drawing Sheet