APPARATUS FOR CONTROLLING A CONTAINER VALVE AND FILLING THE CONTAINER WITH A CARBONATED LIQUID

Filed March 22, 1961 2 Sheets-Sheet 2

FIG. 2

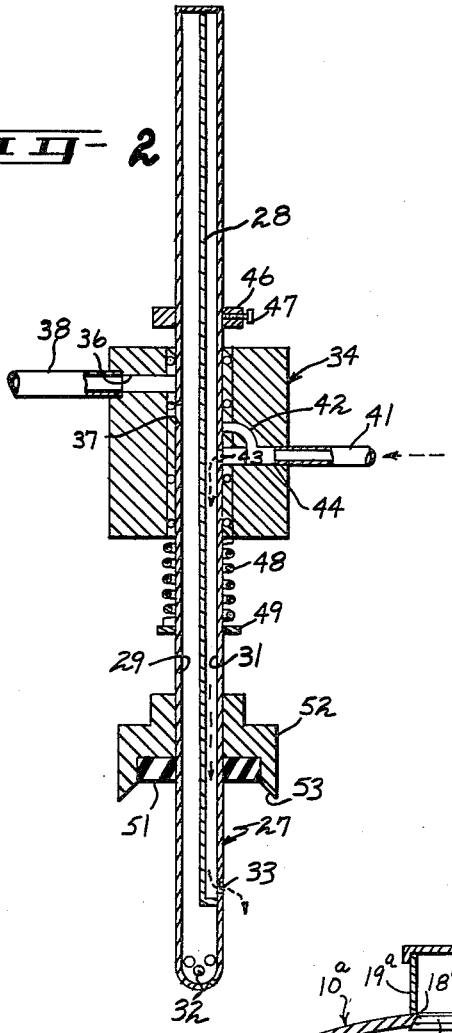

FIG. 3

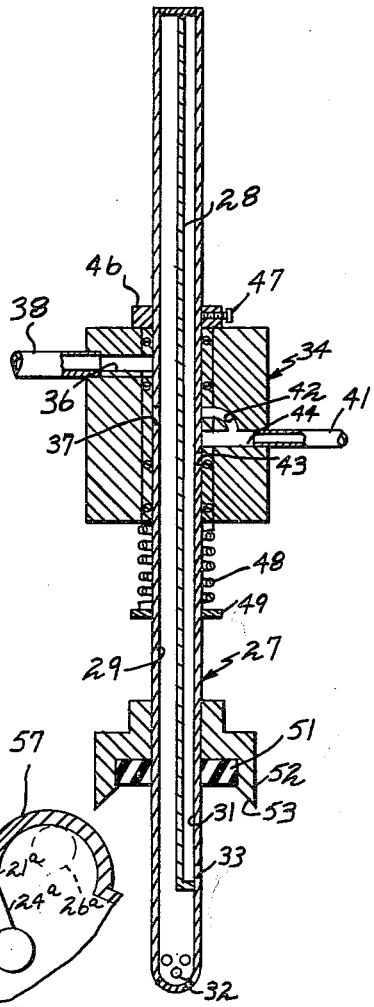

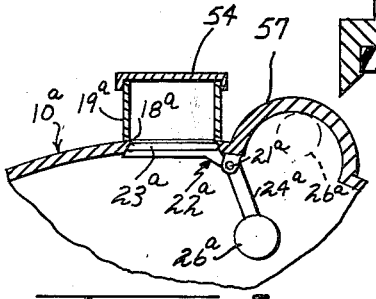

FIG. 5

FIG. 4

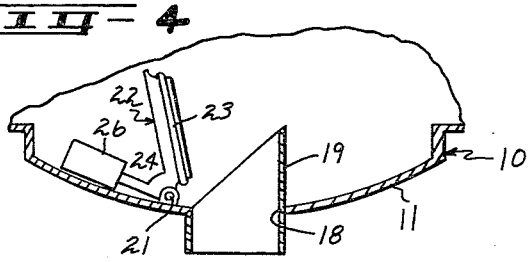

INVENTOR.
Robert F. Mayeux

BY
Jennings, Carter & Thompson
Attorneys