Oct. 1, 1963 R. F. MAYEUX 3,105,527

APPARATUS FOR CONTROLLING A CONTAINER VALVE AND FILLING THE CONTAINER WITH A CARBONATED LIQUID

Filed March 22, 1961 2 Sheets-Sheet 1

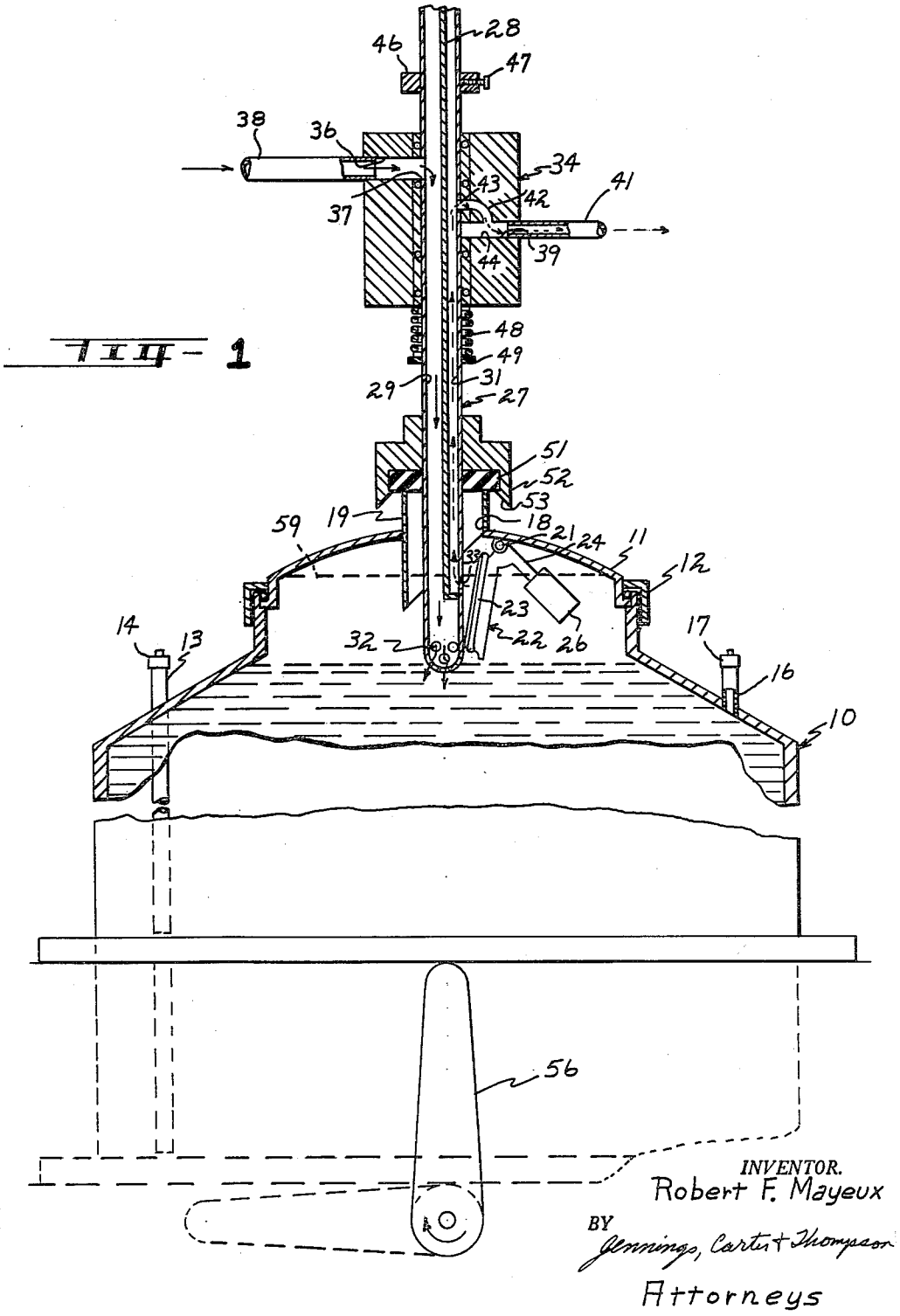

INVENTOR.
Robert F. Mayeux

BY
Jennings, Carter + Thompson
Attorneys