US006994826B1

(12) **United States Patent**
Hasselbrink, Jr. et al.

(10) **Patent No.: US 6,994,826 B1**
(45) **Date of Patent: Feb. 7, 2006**

(54) **METHOD AND APPARATUS FOR CONTROLLING CROSS CONTAMINATION OF MICROFLUID CHANNELS**

(75) Inventors: **Ernest F. Hasselbrink, Jr.**, Walnut Creek, CA (US); **Jason E. Rehm**, Alameda, CA (US); **Phillip H. Paul**, Livermore, CA (US); **Don W. Arnold**, Livermore, CA (US)

(73) Assignee: **Sandia National Laboratories**, Livermore, CA (US)

(*) Notice: Subject to any disclaimer, the term of this patent is extended or adjusted under 35 U.S.C. 154(b) by 931 days.

(21) Appl. No.: **09/669,862**

(22) Filed: **Sep. 26, 2000**

(51) **Int. Cl.**
B01L 3/02 (2006.01)
G01N 27/447 (2006.01)
G01N 27/453 (2006.01)

(52) **U.S. Cl.** **422/100**; 204/451; 204/601

(58) **Field of Classification Search** 204/451–455, 204/601–605; 422/99, 100
See application file for complete search history.

(56) **References Cited**

U.S. PATENT DOCUMENTS

5,833,826 A 11/1998 Nordman 204/452
5,842,787 A 12/1998 Kopf-Sill et al. 366/340
5,858,187 A 1/1999 Ramsey et al. 204/452
5,858,195 A 1/1999 Ramsey 204/601
5,885,470 A 3/1999 Parce et al. 216/33
6,001,229 A 12/1999 Ramsey 204/451
6,033,546 A 3/2000 Ramsey 204/603
6,090,251 A * 7/2000 Sundberg et al. 204/453
6,149,787 A * 11/2000 Chow et al. 204/451
6,270,641 B1 * 8/2001 Griffiths et al. 204/451
6,368,871 B1 * 4/2002 Christel et al. 436/180
6,540,896 B1 * 4/2003 Manz et al. 204/451

* cited by examiner

Primary Examiner—Alex Noguerola
(74) *Attorney, Agent, or Firm*—Donald A. Nissen

(57) **ABSTRACT**

A method for controlling fluid flow at junctions in microchannel systems. Control of fluid flow is accomplished generally by providing increased resistance to electric-field and pressure-driven flow in the form of regions of reduced effective cross-sectional area within the microchannels and proximate a channel junction. By controlling these flows in the region of a microchannel junction it is possible to eliminate sample dispersion and cross contamination and inject well-defined volumes of fluid from one channel to another.
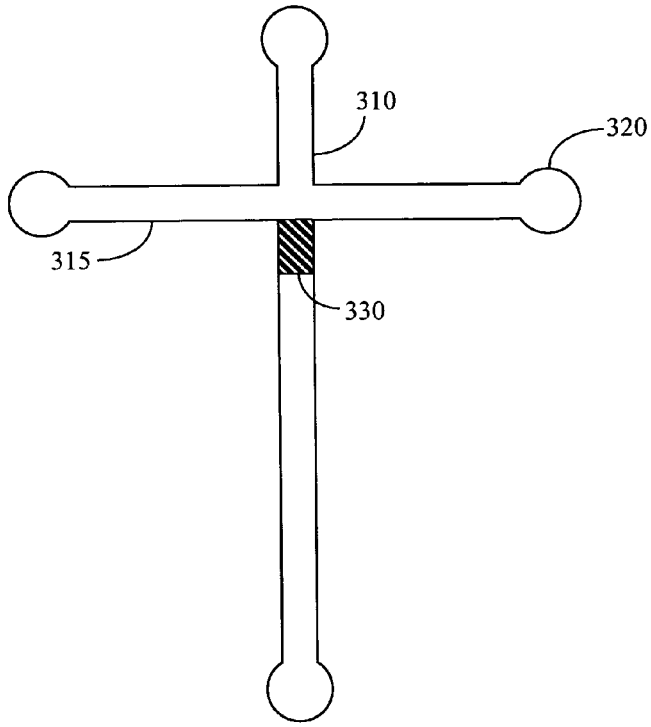
7 Claims, 5 Drawing Sheets