No. 776,326. PATENTED NOV. 29, 1904.

H. HUBBELL.

MULTIPLE ATTACHMENT PLUG.

APPLICATION FILED FEB. 26, 1903.

NO MODEL. 2 SHEETS—SHEET 1.

Fig. 1.

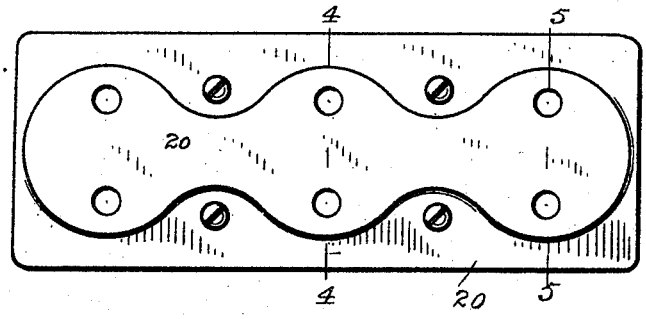

Fig. 2.

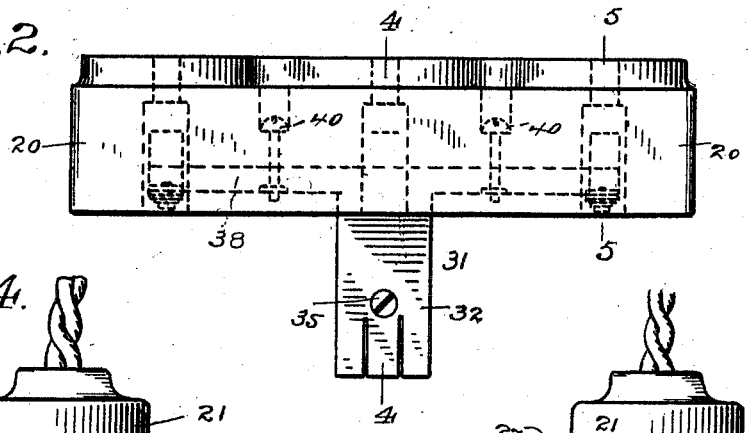

Fig. 4.

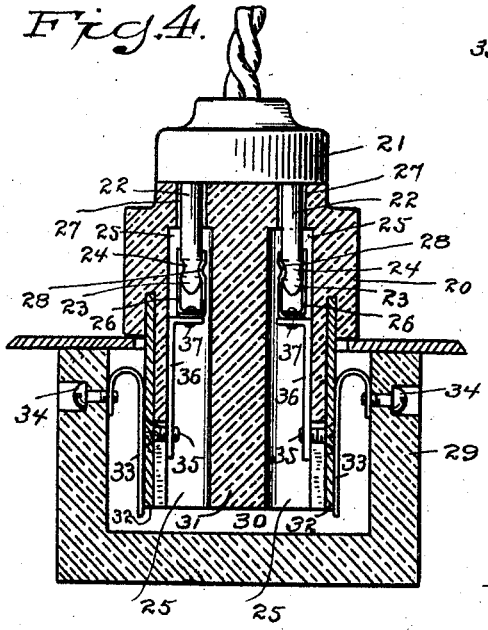

Fig. 5.

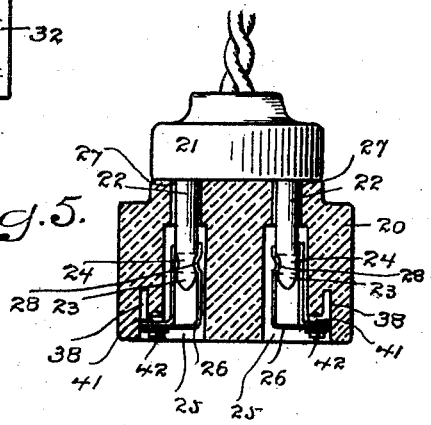

Fig. 3.

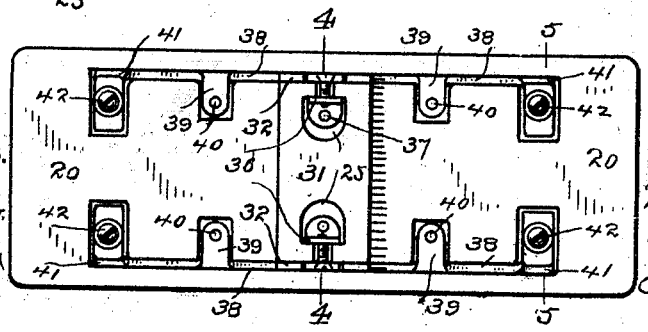

WITNESSES.

H. A. Lamb.

S. W. Atherton

INVENTOR.

Harvey Hubbell

By

C. H. Wrosler

Atty.