July 26, 1966 V. C. WESTBERG 3,263,126

DEVICE FOR PRODUCING STROBOSCOPIC LIGHT FOR TIMING ENGINES

Filed July 11, 1962

fig. 1.

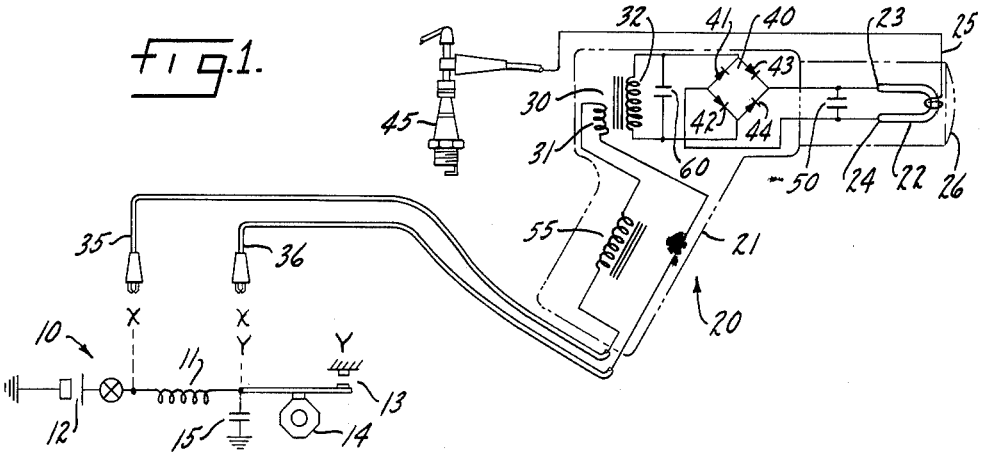

fig. 4.

VOLTAGE ACROSS BREAKER POINTS

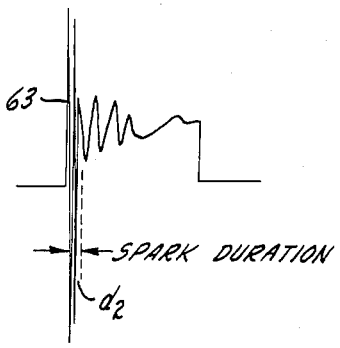

fig. 2.

VOLTAGE ACROSS IGNITION COIL

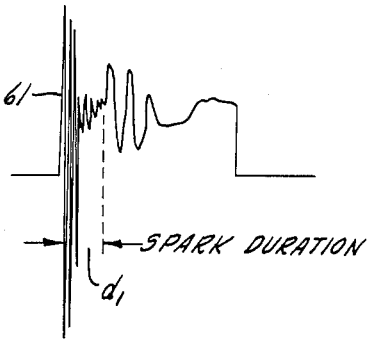

fig. 5.

VOLTAGE ACROSS TRANSFORMER PRIMARY

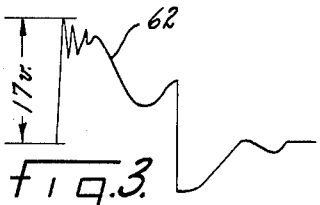

fig. 3.

VOLTAGE ACROSS TRANSFORMER PRIMARY

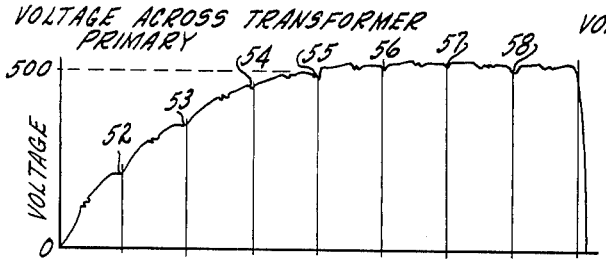

fig. 6. BUILDUP ACROSS CAPACITOR

INVENTOR.
Vernon C. Westberg,
BY Wolfe, Hubbard, Voit & Osann
Attorneys.