United States Patent [19]

Grech

[11] **4,155,626**

[45] **May 22, 1979**

[54] **SPECTACLES WITH A WIDE ANGLE OF VISION AND METHOD**

[76] Inventor: **Leonard Grech,** P.O. Box 2774, Capistrano Beach, Calif. 92624

[21] Appl. No.: **769,670**

[22] Filed: **Feb. 17, 1977**

[51] **Int. Cl.**[2] **G02B 27/02;** G02B 13/00; G02B 3/10; G02C 9/00

[52] **U.S. Cl.** **350/145;** 351/41; 351/47; 350/197; 350/194; 350/225

[58] **Field of Search** 351/57, 159, 169, 170, 351/41, 47; 350/197, 212, 225, 133, 145, 146, 189, 132, 194

[56] **References Cited**

U.S. PATENT DOCUMENTS

2,184,018	12/1939	Ort	351/212 X
2,537,047	1/1951	Gatten	351/159
2,550,685	5/1951	Garutso	350/197
2,607,918	8/1952	Gruber	351/47 X
3,202,046	8/1965	Roos	351/159 X
3,298,771	1/1967	Ratliff	350/133
3,463,570	8/1969	Ratliff	350/132 X
3,588,227	6/1971	Yamamoto et al.	350/194

Primary Examiner—Paul A. Sacher
Assistant Examiner—Rodney B. Bovernick
Attorney, Agent, or Firm—Gordon L. Peterson

[57] **ABSTRACT**

Wide angle spectacles comprising a spectacle frame and a wide angle lens system attached to the frame. The wide angle lens system includes at least first and second lenses. The lenses are arranged so that light passes in series first through the first lens and then through the second lens in travelling to the eye of the user. The lens system materially increases the peripheral vision of the user.
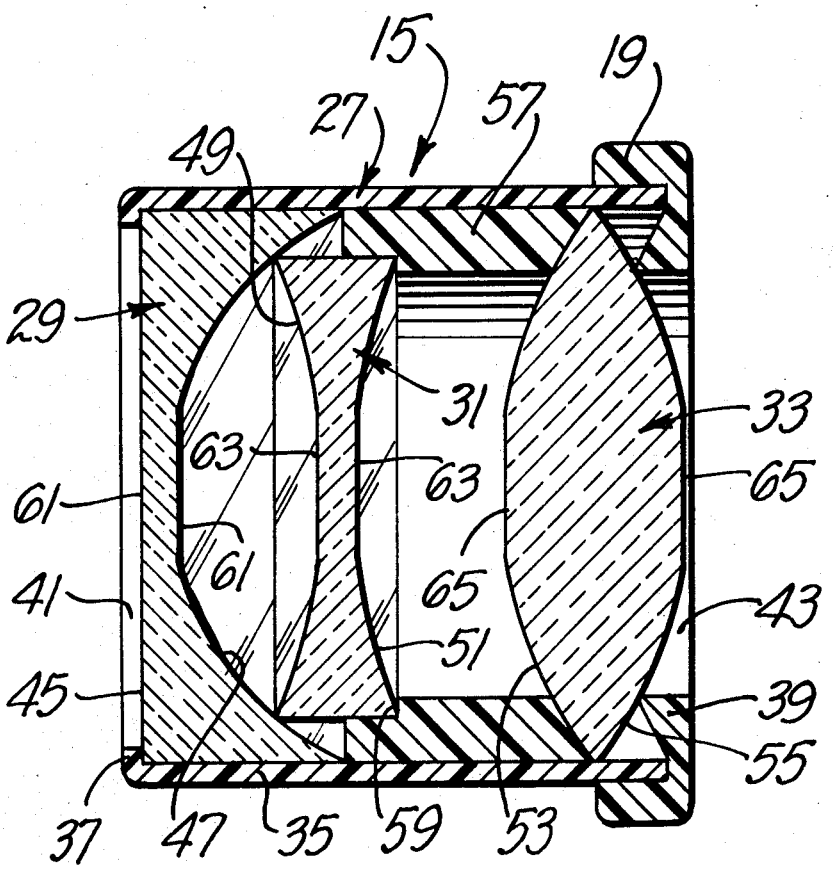
10 Claims, 4 Drawing Figures