METHOD OF MAKING A MOLD AND MOLDING A BIFOCAL LENS

Filed Dec. 19, 1967 3 Sheets-Sheet 1

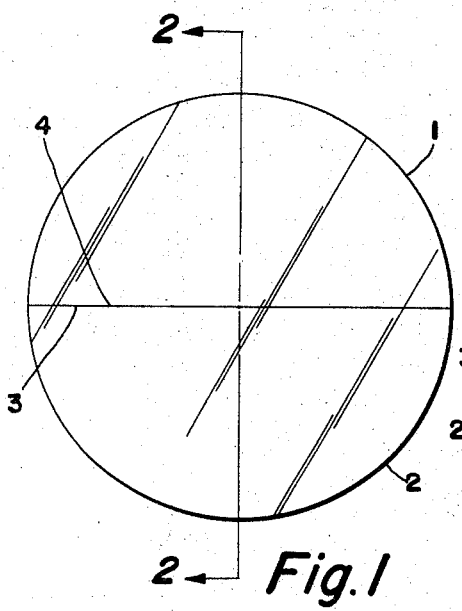


Fig. 1

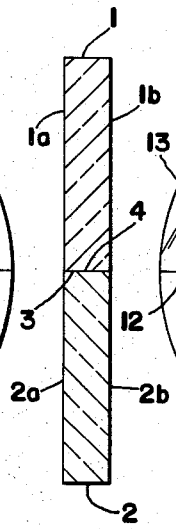


Fig. 2

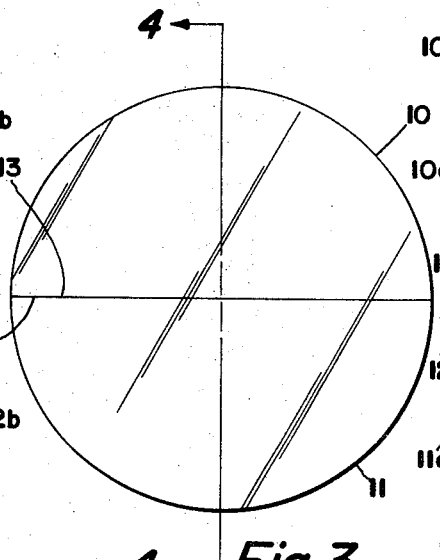


Fig. 3

Fig. 4

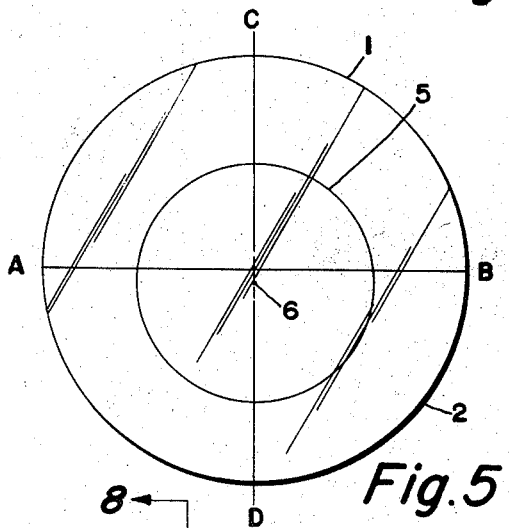


Fig. 5

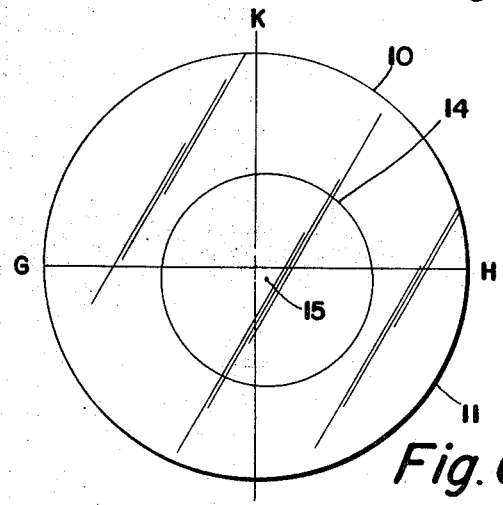


Fig. 6

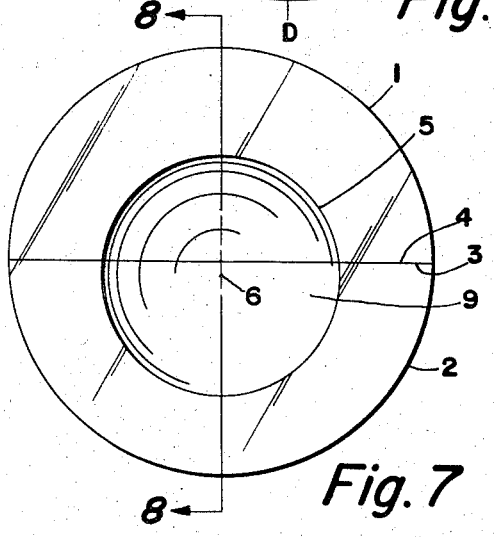


Fig. 7

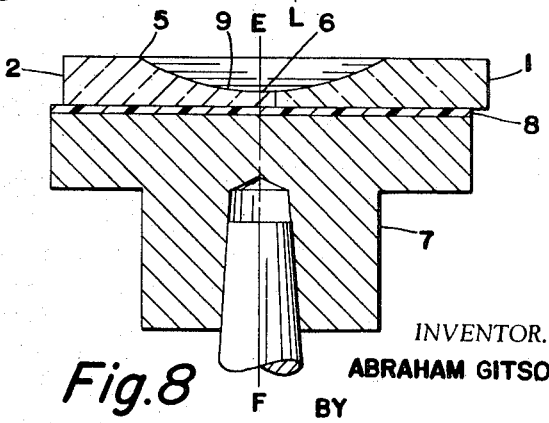


Fig. 8

INVENTOR.
ABRAHAM GITSON
BY
Isler & Ornstein
ATTORNEYS