CONTROL OF OPTICAL PROPERTIES OF MATERIALS
WITH LIQUID CRYSTALS
Filed April 26, 1965

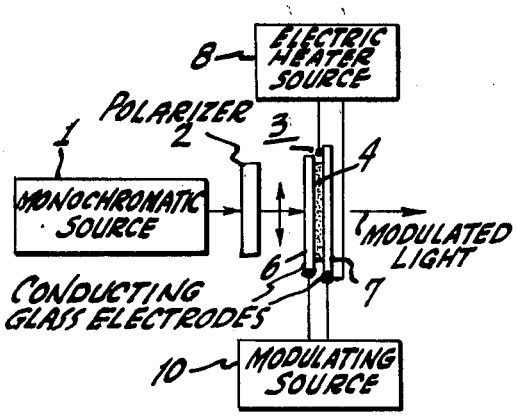

Fig. 1.

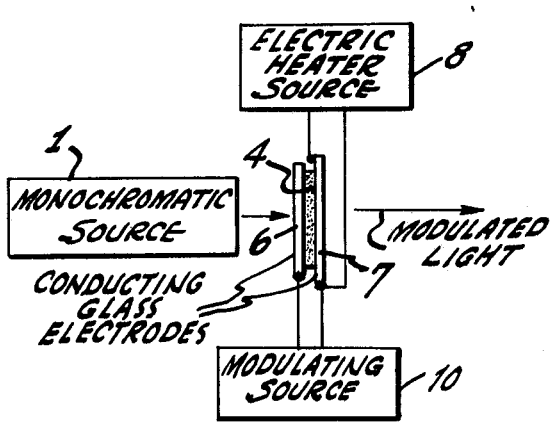

Fig. 2.

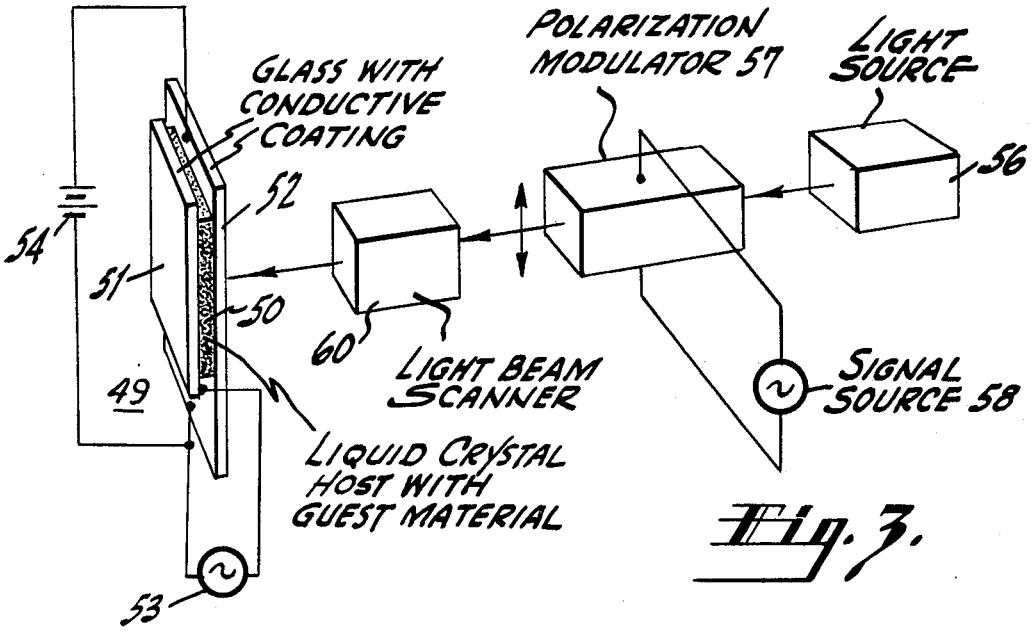

Fig. 3.

INVENTOR.
GEORGE H. HEILMEIER
BY Edward J. Norton
Attorney