May 1, 1956 H. R. GRIESHABER 2,743,726

SURGICAL INSTRUMENT

Filed May 28, 1953

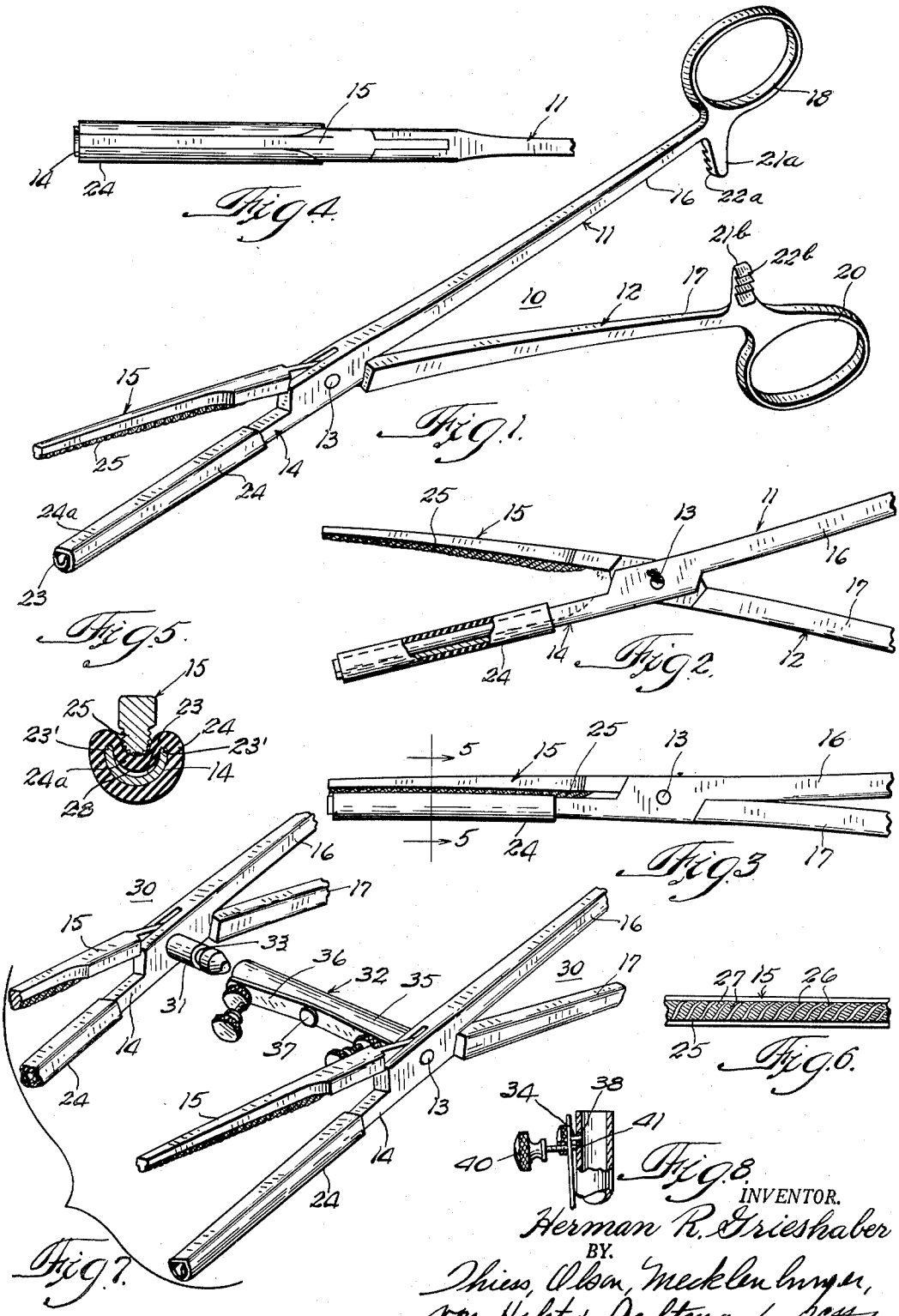

INVENTOR.
Herman R. Grieshaber
BY.
Thiess, Olson, Mecklenburger, von Hoist & Coltman. Attys.