US009636726B2

(12) **United States Patent**
**Nespoli et al.**

(10) **Patent No.: US 9,636,726 B2**
(45) **Date of Patent: May 2, 2017**

(54) **APPARATUS FOR CHANGING ROLLS OF A STRAIGHTENING MACHINE**

(71) Applicant: **PRIMETALS TECHNOLOGIES ITALY S.R.L.**, Marnate (VA) (IT)

(72) Inventors: **Danilo Nespoli**, Vanzaghello MI (IT); **Emanuele Pace**, Legnano-MI (IT)

(73) Assignee: **Primetals Technologies Italy S.R.L.**, Marnate (VA) (IT)

( * ) Notice: Subject to any disclaimer, the term of this patent is extended or adjusted under 35 U.S.C. 154(b) by 50 days.

(21) Appl. No.: **14/773,454**

(22) PCT Filed: **Jan. 30, 2014**

(86) PCT No.: **PCT/EP2014/051825**
§ 371 (c)(1),
(2) Date: **Sep. 8, 2015**

(87) PCT Pub. No.: **WO2014/135314**
PCT Pub. Date: **Sep. 12, 2014**

(65) **Prior Publication Data**

US 2016/0016214 A1 Jan. 21, 2016

(30) **Foreign Application Priority Data**

Mar. 8, 2013 (EP) ..... 13425038

(51) **Int. Cl.**

| | |
|---|---|
| ***B21B 31/10*** | (2006.01) |
| ***B21D 1/02*** | (2006.01) |
| ***B21D 37/04*** | (2006.01) |
| ***B21D 37/14*** | (2006.01) |

(52) **U.S. Cl.**
CPC ..... ***B21B 31/10*** (2013.01); ***B21D 1/02*** (2013.01); ***B21D 37/04*** (2013.01); ***B21D 37/147*** (2013.01)

(58) **Field of Classification Search**
CPC ..... B21B 31/10; B21D 1/02; B21D 37/04; B21D 37/147
See application file for complete search history.

(56) **References Cited**

U.S. PATENT DOCUMENTS

8,336,354 B2 12/2012 Haag et al.

FOREIGN PATENT DOCUMENTS

| | | | |
|---|---|---|---|
| DE | 2131739 | A1 | 5/1972 |
| DE | 202007015406 | U1 | 2/2008 |
| DE | 102007046138 | B3 | 6/2009 |
| WO | 2008145355 | A1 | 12/2008 |

*Primary Examiner* — Teresa M Ekiert
(74) *Attorney, Agent, or Firm* — Laurence A. Greenberg; Werner H. Stemer; Ralph E. Locher

(57) **ABSTRACT**

An apparatus changes rollers of a straightening machine. The straightening machine contains a plurality of cantilever roller shafts for receiving the rollers. The apparatus contains at least a trolley having a device for supporting an entire set of upper and/or lower rollers to be installed in or taken off from the straightening machine. The apparatus further has at least two vertical plates spaced apart horizontally, a device for releasably securing the plates to the trolley, and an actuator connected to the plates and intended to be received in first passages defined in the straightening machine. The actuator is able to reversibly displace the plates and the trolley between a first position wherein the plates and the trolley are close to the straightening machine and a second position wherein the plates and the trolley are spaced apart from the straightening machine.
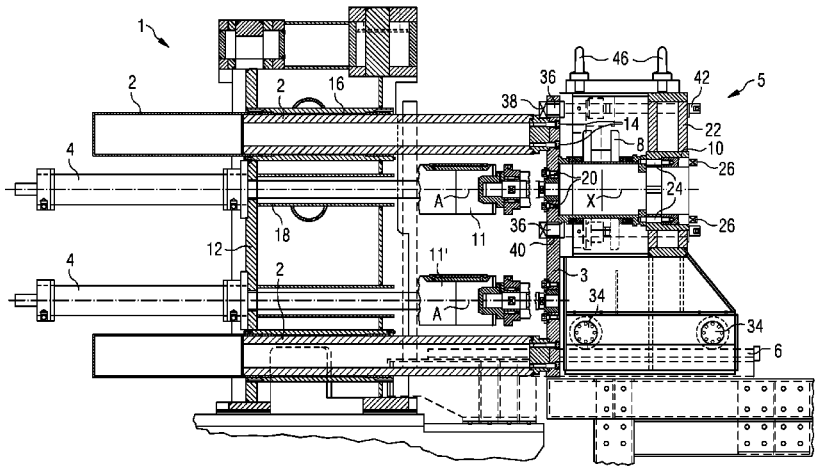
**15 Claims, 8 Drawing Sheets**