US009636026B2

(12) **United States Patent**
Hafiz et al.

(10) **Patent No.: US 9,636,026 B2**
(45) **Date of Patent: May 2, 2017**

(54) **MULTI-LAYERED STRUCTURE**

(71) Applicant: **HERAEUS DEUTSCHLAND GMBH & CO. KG**, Hanau (DE)

(72) Inventors: **Jami A. Hafiz**, Cedar Park, TX (US); **Stefan Schibli**, Frankfurt am Main (DE); **Jens Troetzschel**, Ronneburg-Neuwiedermus (DE)

(73) Assignee: **Heraeus Deutschland GmbH & Co. KG**, Hanau (DE)

(*) Notice: Subject to any disclaimer, the term of this patent is extended or adjusted under 35 U.S.C. 154(b) by 0 days.

(21) Appl. No.: **14/991,307**

(22) Filed: **Jan. 8, 2016**

(65) **Prior Publication Data**

US 2016/0120423 A1 May 5, 2016

Related U.S. Application Data

(62) Division of application No. 14/323,163, filed on Jul. 3, 2014.

(51) **Int. Cl.**
H01L 51/00 (2006.01)
A61B 5/00 (2006.01)
(Continued)

(52) **U.S. Cl.**
CPC ***A61B 5/04*** (2013.01); ***A61B 5/0422*** (2013.01); ***A61B 5/6846*** (2013.01);
(Continued)

(58) **Field of Classification Search**
CPC A61B 5/04; A61B 5/6846; A61B 5/6851; A61B 2562/125; B21F 19/00; A61N 1/05;
(Continued)

(56) **References Cited**

U.S. PATENT DOCUMENTS

3,994,302 A 11/1976 Brennen
6,034,295 A 3/2000 Rehberg et al.
(Continued)

FOREIGN PATENT DOCUMENTS

EP 2068146 6/2009
EP 2075274 7/2009
(Continued)

OTHER PUBLICATIONS

Cho, Young-Sang et al., "Colloidal Indium Tin Oxide Nanoparticles for Transparent and Conductive Films," Thin Solid Films, 515, pp. 1864-1871 (Aug. 23, 2006).
(Continued)

Primary Examiner — Long K Tran
Assistant Examiner — Thai T Vuong
(74) *Attorney, Agent, or Firm* — Dicke, Billig & Czaja, PLLC

(57) **ABSTRACT**

One aspect relates to a layered structure with a substrate, a first layer over the substrate, and a second layer over the first layer. The substrate and the second layer are an electrically conductive material and the first layer is an insulating material or the substrate and the second layer are insulating material and the first layer is electrically conductive material. At least one of the first and second layers comprises an electrically conductive polymer.
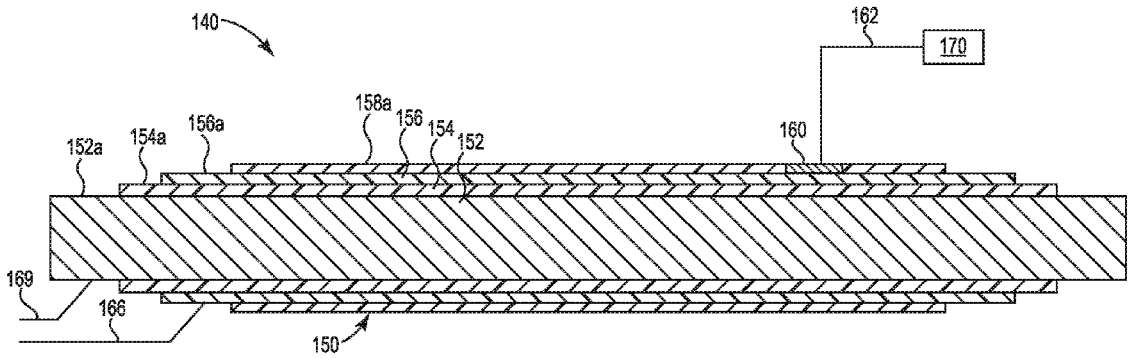
11 Claims, 8 Drawing Sheets