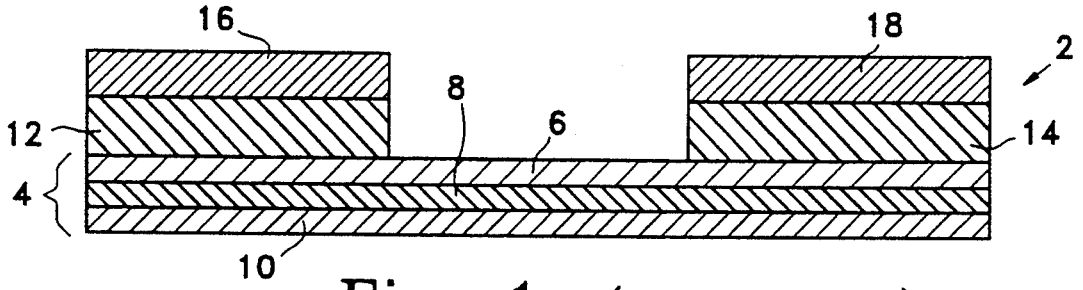

Fig. 1 (PRIOR ART)

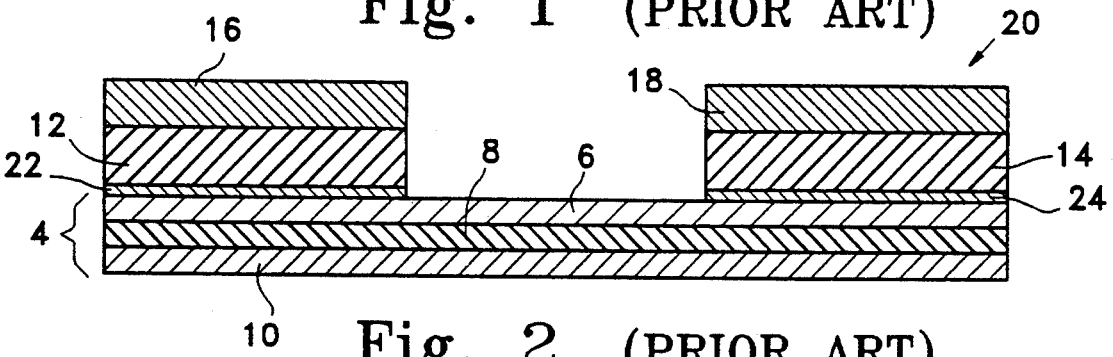

Fig. 2 (PRIOR ART)

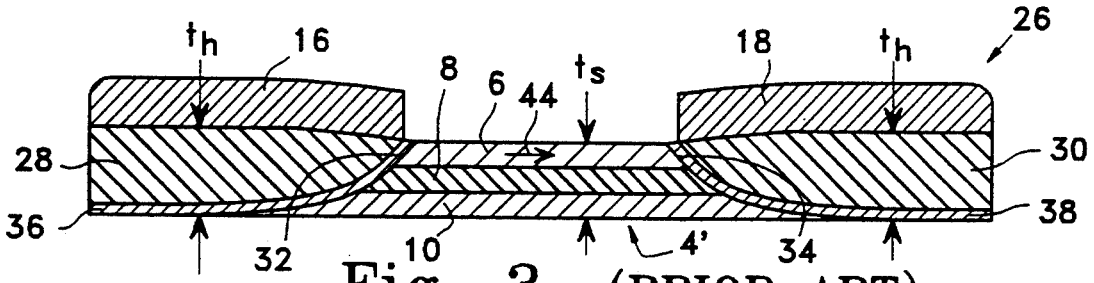

Fig. 3 (PRIOR ART)

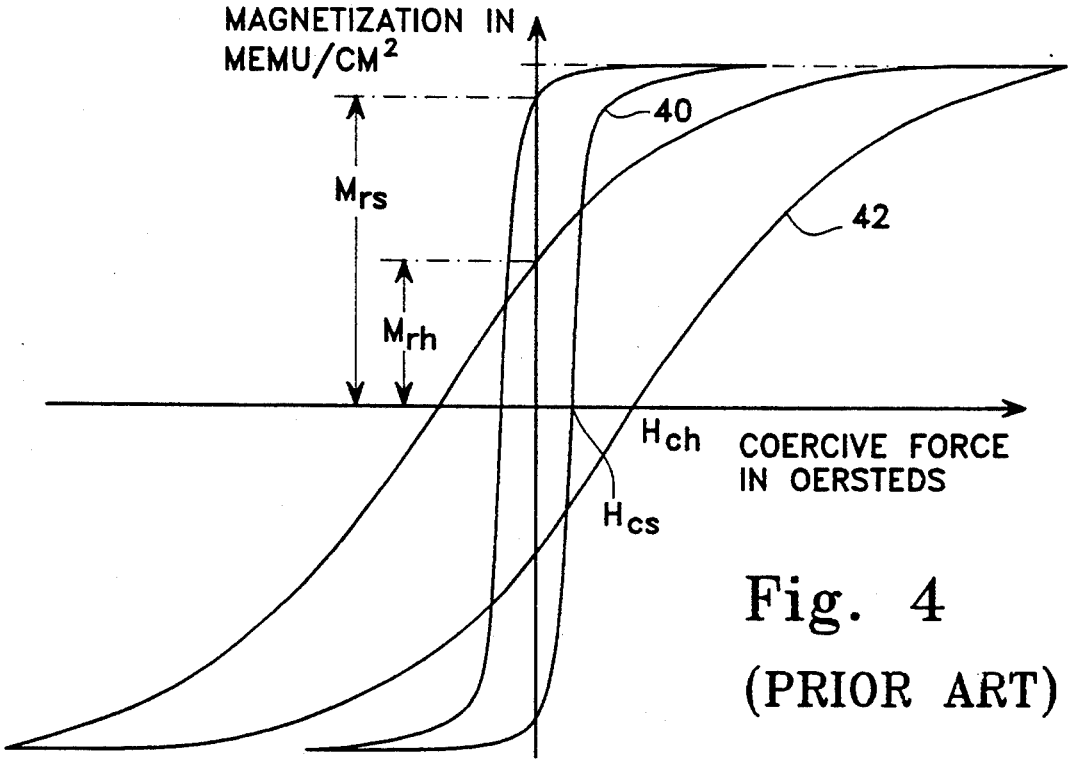

Fig. 4 (PRIOR ART)