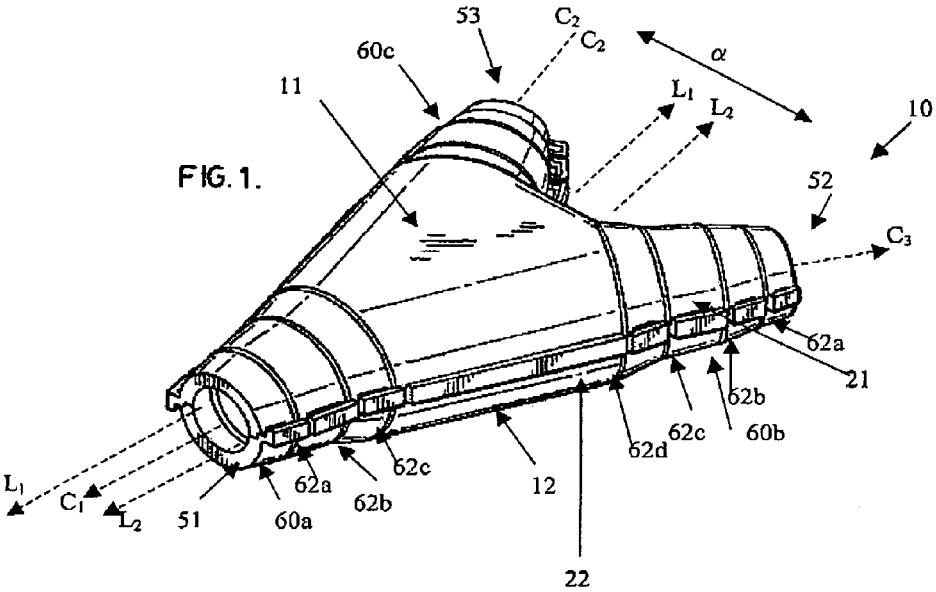
53
C_2
C_2
60c
α
11
L_1
L_2
10
52
C_3
62a
21
62b
60b
62c
62d
12
22
L_1
C_1
L_2
51
60a
62a
62b
62c

FIG. 1.