US006125226A

United States Patent [19]

Forrest et al.

[11] **Patent Number: 6,125,226**

[45] **Date of Patent: Sep. 26, 2000**

[54] **LIGHT EMITTING DEVICES HAVING HIGH BRIGHTNESS**

[75] Inventors: **Stephen R. Forrest**; **Paul Burrows**; **Dimitri Z. Garbuzov**, all of Princeton, N.J.

[73] Assignee: **The Trustees of Princeton University**, Princeton, N.J.

[21] Appl. No.: **08/844,353**

[22] Filed: **Apr. 18, 1997**

[51] **Int. Cl.**[7] **G02B 6/10**; H01J 1/62

[52] **U.S. Cl.** **385/131**; 313/504; 313/506

[58] **Field of Search** 385/131, 901; 313/502–509

[56] **References Cited**

U.S. PATENT DOCUMENTS

5,294,870	3/1994	Tang et al.	313/504
5,663,573	9/1997	Epstein et al.	257/40
5,674,597	10/1997	Fuji et al.	428/212
5,834,893	11/1998	Bulovic et al.	313/506
5,994,835	11/1999	Wilson et al.	313/504

FOREIGN PATENT DOCUMENTS

WO 96/19792 6/1996 WIPO .

OTHER PUBLICATIONS

Burrows, P. et al., "Reliability and degradation of organic light emitting devices," Applied Phys. Lett., vol. 65, No. 23, Dec. 5, 1994, pp. 2922–2923.

Garbuzov, D. et al., "Organic films deposited on Si p–n junctions: Accurate measurements of fluorescence internal efficiency, and application to luminescent antireflection coatings," J. Appl. Phys., vol. 80, No. 8, Oct. 15, 1996, pp. 4644–4648.

Wu, C. et al., "Integrated three–color organic light–emitting devices," Appl. Phys. Lett., vol. 69, No. 21, Nov. 18, 1996, pp. 3117–3119.

Vestweber, H. et al., "Electroluminescence from polymer blends and molecularly doped polymers," Synthetic Metals 64 (1994), pp. 141–145.

Depp. S. et al., "Flat–Panel Displays," Scientific American, Mar. 1993, pp. 90–97.

Garbuzov, D. et al., "Photoluminescence efficiency and absorption of aluminum–tris–quinolate (Alq_3) thin films," Chemical Physics Letters 249 (1996), pp. 433–437.

Macleod, H., "Thin–Film Optical Filters," American Elsevier Publishing Company, Inc., New York (1969), pp. 94–110.

Burrows, P. et al., "Color–tunable organic light–emitting devices," Appl. Phys. Lett., vol. 69, No. 20, Nov. 11, 1996, pp. 2959–2961.

Adachi, C. et al., "Blue light–emitting organic electroluminescent devices," Appl. Phys. Lett., vol. 56, No. 9, Feb. 26, 1990, pp. 799–801.

Hosokawa, C. et al., "Highly efficient blue electroluminescence from a distyrylarylene emitting layer with a new dopant," Appl. Phys. Lett. 67, vol. No. 26, Dec. 25, 1995, pp. 3853–3855.

Johnson, C. et al., "Luminescent Iridium (I), Rhodium (I), and Platinum (II) Dithiolate Complexes," J. Am. Chem. Soc., vol. 105, No. 7, 1983, pp. 1795–1802.

Primary Examiner—Rodney Bovernick
Assistant Examiner—Juliana K. Kang
Attorney, Agent, or Firm—Kenyon & Kenyon

[57] **ABSTRACT**

Light emitting devices comprising a transparent substrate, a reflective layer on the substrate having at least one opening therein, a waveguiding layer on said reflective layer, and at least one OLED on the waveguiding layer for emitting light of a predetermined color. The light emitted from each OLED is directed through the at least one opening in the reflective layer for emission through the substrate.
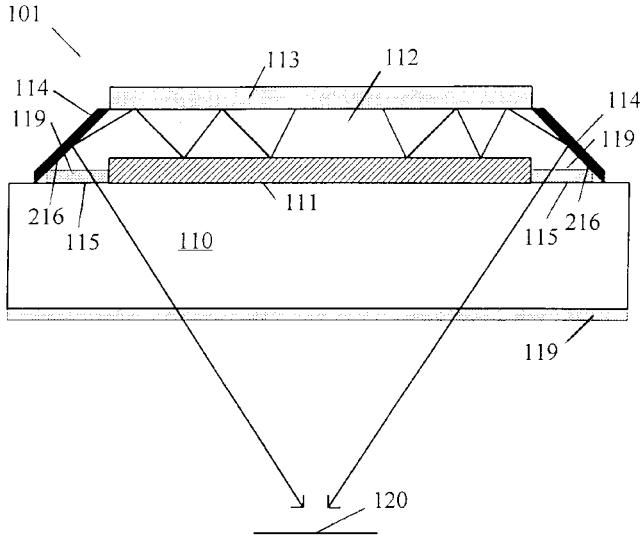
44 Claims, 7 Drawing Sheets