US009924626B2

(12) **United States Patent**
McCarty, II et al.

(10) **Patent No.: US 9,924,626 B2**
(45) **Date of Patent: Mar. 27, 2018**

(54) **SYSTEM FOR IMAGING AND ORIENTING SEEDS AND METHOD OF USE**

(71) Applicant: **Dow AgroSciences LLC**, Indianapolis, IN (US)

(72) Inventors: **Donald L. McCarty, II**, Freeland, MI (US); **Sivarama Reddy Chennareddy**, West Lafayette, IN (US); **Toby Cicak**, Indianapolis, IN (US); **Rodrigo Sarria**, West Lafayette, IN (US); **David T. Gillespie**, Pearland, TX (US)

(73) Assignee: **Dow AgroSciences LLC**, Indianapolis, IN (US)

(*) Notice: Subject to any disclaimer, the term of this patent is extended or adjusted under 35 U.S.C. 154(b) by 339 days.

(21) Appl. No.: **14/704,691**

(22) Filed: **May 5, 2015**

(65) **Prior Publication Data**

US 2015/0321353 A1 Nov. 12, 2015

Related U.S. Application Data

(60) Provisional application No. 61/989,266, filed on May 6, 2014.

(51) **Int. Cl.**
G06K 9/00 (2006.01)
A01C 1/00 (2006.01)
(Continued)

(52) **U.S. Cl.**
CPC ***A01C 1/00*** (2013.01); ***B25J 9/1697*** (2013.01); ***G06T 1/0007*** (2013.01); ***G06T 7/0002*** (2013.01); ***G06T 7/12*** (2017.01); ***G06T 7/49*** (2017.01); ***G06T 7/70*** (2017.01); ***G06T 7/73*** (2017.01); *G01N 1/286* (2013.01); *G01N 35/0099* (2013.01); *G05B 2219/37555* (2013.01); *G05B 2219/37608* (2013.01); *G05B 2219/39106* (2013.01); *G05B 2219/39107* (2013.01); *G06T 2207/10004* (2013.01);
(Continued)

(58) **Field of Classification Search**
None
See application file for complete search history.

(56) **References Cited**

U.S. PATENT DOCUMENTS

5,015,580 A 5/1991 Christou et al.
5,051,825 A 9/1991 Cochran et al.
(Continued)

FOREIGN PATENT DOCUMENTS

CN 101001958 A 7/2007
CN 102741415 A 10/2012
(Continued)

OTHER PUBLICATIONS

Lindeberg, Detecting Salient Blob-Like Image Structures and Their Scales with a Scale-Space Primal Sketch: A Method for Focus-of-Attention, 11(3) International Journal of Computer Vision, 283-318 (1993).

(Continued)

Primary Examiner — Soo Park
(74) *Attorney, Agent, or Firm* — Marcos P. Rivas; Barnes & Thornburg LLP

(57) **ABSTRACT**

A system and method for the automated or semi-automated imagining and orienting of seeds to prepare the seeds for transformation and transgenic engineering.
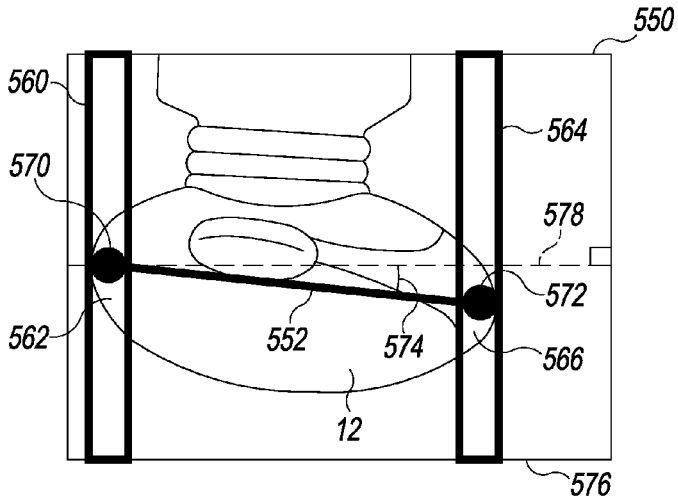
21 Claims, 40 Drawing Sheets