US008020726B1

(12) **United States Patent**
Gorenz et al.

(10) **Patent No.: US 8,020,726 B1**
(45) **Date of Patent: Sep. 20, 2011**

(54) **POWDER DISPERSION SYSTEM**

(75) Inventors: **Heather M. Gorenz**, Albuquerque, NM (US); **John E. Brockmann**, Albuquerque, NM (US); **Daniel A. Lucero**, Albuquerque, NM (US)

(73) Assignee: **Sandia Corporation**, Albuquerque, NM (US)

(*) Notice: Subject to any disclaimer, the term of this patent is extended or adjusted under 35 U.S.C. 154(b) by 487 days.

(21) Appl. No.: **11/873,689**

(22) Filed: **Oct. 17, 2007**

Related U.S. Application Data

(60) Provisional application No. 60/852,555, filed on Oct. 18, 2006.

(51) **Int. Cl.**
B67B 7/00 (2006.01)
G01F 11/00 (2006.01)

(52) **U.S. Cl.** **222/1**

(58) **Field of Classification Search** 347/73; 222/1; 607/120
See application file for complete search history.

(56) **References Cited**

U.S. PATENT DOCUMENTS

3,913,795 A * 10/1975 Coucher et al. 406/134
4,586,854 A * 5/1986 Newman et al. 406/153
4,953,792 A * 9/1990 Evans 239/654
5,037,247 A * 8/1991 Kaiser et al. 406/153
5,502,998 A * 4/1996 Miller et al. 73/1.06
6,029,661 A * 2/2000 Whaley et al. 128/203.15
6,159,188 A * 12/2000 Laibovitz et al. 604/294
6,260,549 B1 * 7/2001 Sosiak 128/200.23
6,451,784 B1 * 9/2002 Placke et al. 514/184
6,501,052 B2 * 12/2002 Cox et al. 219/486
6,719,960 B1 * 4/2004 Hills et al. 424/46
2004/0215135 A1 * 10/2004 Sheldrake et al. 604/68

FOREIGN PATENT DOCUMENTS

WO WO 2004095379 A1 * 11/2004

OTHER PUBLICATIONS

Fox Valve, et al., "Fox Venturi Eductors", Fox Mini-Eductors for Aspirating, Sampling, Mixing, and Vacuum Generation, Product Brochure Undated.
KDS Scientific, et al., "KDS Model 210 Infusion Withdrawal Pumps", KDS Scientific Syringe Pumps and Dispensers, Product Brochure 2006.
TSI Inc., et al., "TSI Powder Dispersers—Model 3433", Model 3433 Small Scale Powder Disperser Brochure 2004.

* cited by examiner

Primary Examiner — Sean E Conley
Assistant Examiner — Regina Yoo
(74) *Attorney, Agent, or Firm* — Madelynne J. Farber

(57) **ABSTRACT**

A powder dispersion method and apparatus comprising an air eductor and a powder dispensing syringe inserted into a suction connection of the air eductor.
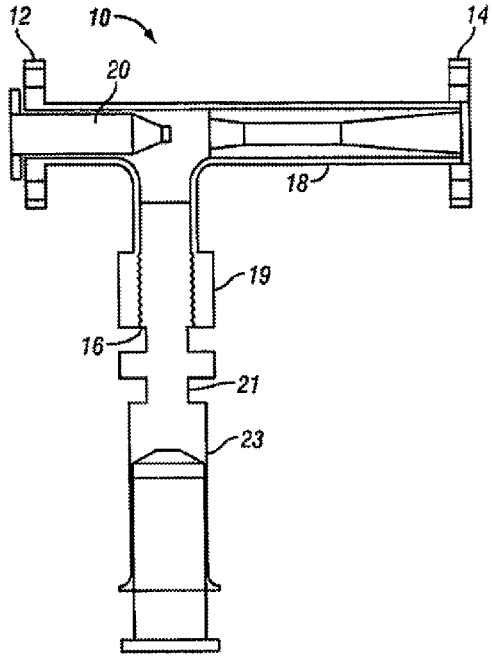
8 Claims, 6 Drawing Sheets