# United States Patent [19]

**Shieh**

[11] **Patent Number: 4,916,926**

[45] **Date of Patent: Apr. 17, 1990**


[54] **LOCKING APPARATUS**


[76] Inventor: **Jin R. Shieh,** No. 178, Shih Chia Rd., Taichung City, Taiwan



[21] Appl. No.: **211,718**

[22] Filed: **Jun. 7, 1988**

[51] **Int. Cl.**[4] ..... **E05B 65/06**

[52] **U.S. Cl.** ..... **70/135;** 292/DIG. 17; 16/337; 16/354; 70/223; 70/380

[58] **Field of Search** ..... 70/360, 379 R, 380, 70/222, 223, 135; 292/DIG. 17; 16/231, 337, 354



[56] **References Cited**

U.S. PATENT DOCUMENTS

| | | | |
|---|---|---|---|
| 1,358,710 | 11/1920 | Day | 16/354 X |
| 1,686,406 | 10/1928 | Caplan | 70/223 |
| 1,930,651 | 10/1933 | Lyons et al. | 70/223 |
| 2,017,530 | 10/1935 | De Orlow | 70/223 |
| 2,210,186 | 8/1940 | Ross | 70/380 X |
| 2,497,328 | 2/1950 | Smith et al. | 70/223 X |
| 2,516,935 | 8/1950 | Weaver | 16/354 X |
| 2,587,781 | 3/1952 | Stanfield et al. | 16/337 X |
| 3,251,546 | 5/1966 | Rigo et al. | 70/360 X |
| 3,432,881 | 3/1969 | Putsch et al. | 16/354 X |
| 3,896,645 | 7/1975 | Nagy et al. | 70/223 X |
| 4,064,652 | 12/1977 | Johnston | 292/DIG. 17 X |
| 4,226,454 | 10/1980 | Tranberg et al. | 70/380 X |
| 4,384,744 | 5/1983 | Barley | 16/354 X |
| 4,483,162 | 11/1984 | Dunphy et al. | 70/380 X |
| 4,598,940 | 7/1986 | De Groat | 292/DIG. 17 X |
| 4,654,931 | 4/1987 | Sonneborn et al. | 16/337 |
| 4,759,204 | 7/1988 | Neyret | 70/360 |

FOREIGN PATENT DOCUMENTS

| | | | |
|---|---|---|---|
| 437054 | 6/1948 | Italy | 70/379 R |



*Primary Examiner*—Robert L. Wolfe
*Assistant Examiner*—Suzanne L. Dino
*Attorney, Agent, or Firm*—Cushman, Darby & Cushman



[57] **ABSTRACT**

A locking apparatus includes a following member secured to a pivotal axis, a braking piece capable of preventing the member from rotating in a first direction in a first position and of freeing the member in a second position, and a locking device having a tumbler body capable of engaging with the piece in the manner that the braking piece is in the first position when the locking device is in a locking state and when in an unlocking state, the tumbler body can urge the piece to be in the second position.

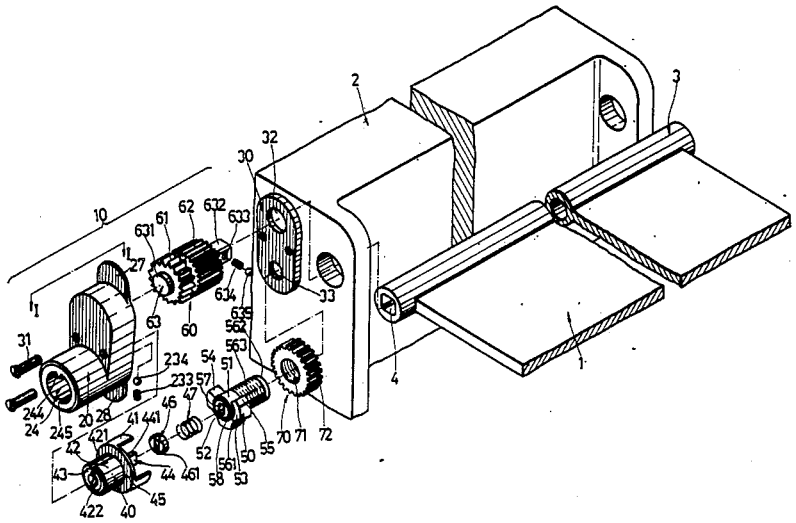
**8 Claims, 3 Drawing Sheets**