US009411326B2

(12) **United States Patent**
Tiwari et al.

(10) **Patent No.: US 9,411,326 B2**
(45) **Date of Patent: Aug. 9, 2016**

(54) **PLANT CONTROL OPTIMIZATION SYSTEM INCLUDING VISUAL RISK DISPLAY**

(75) Inventors: **Awadesh Kumar Tiwari**, Bangalore (IN); **Christopher Eugene Long**, Greensville, SC (US); **Mahesh Kumar Asati**, Bangalore (IN); **Scott Mordin Hoyte**, Greensville, SC (US); **Achalesh Kumar Pandey**, Greensville, SC (US); **Vikas Handa**, Bangalore (IN)

(73) Assignee: **General Electric Company**, Schenectady, NY (US)

(*) Notice: Subject to any disclaimer, the term of this patent is extended or adjusted under 35 U.S.C. 154(b) by 523 days.

(21) Appl. No.: **13/591,195**

(22) Filed: **Aug. 21, 2012**

(65) **Prior Publication Data**

US 2014/0058534 A1 Feb. 27, 2014

(51) **Int. Cl.**
G05B 19/18 (2006.01)
G05B 13/04 (2006.01)

(52) **U.S. Cl.**
CPC ***G05B 13/04*** (2013.01); *Y02P 90/14* (2015.11); *Y02P 90/20* (2015.11)

(58) **Field of Classification Search**
None
See application file for complete search history.

(56) **References Cited**

U.S. PATENT DOCUMENTS

4,269,030	A	5/1981	Osborne	
5,347,466	A	9/1994	Nichols et al.	
7,280,877	B2	10/2007	Shioya et al.	
7,797,062	B2 *	9/2010	Discenzo et al.	700/28
2001/0056315	A1	12/2001	Nagafuchi et al.	
2003/0100974	A1	5/2003	Alvarez et al.	
2004/0123600	A1	7/2004	Brunell et al.	
2006/0178782	A1	8/2006	Pechtl et al.	
2007/0271898	A1	11/2007	Little	
2009/0012653	A1	1/2009	Cheng et al.	
2009/0150040	A1	6/2009	Rofka et al.	
2010/0031667	A1	2/2010	Hoffmann et al.	
2010/0306001	A1 *	12/2010	Discenzo	G05B 13/024 705/7.37
2011/0054965	A1	3/2011	Katagiri et al.	
2011/0066298	A1 *	3/2011	Francino et al.	700/290
2011/0245937	A1 *	10/2011	Rawson et al.	700/90
2012/0130688	A1 *	5/2012	Jiang	F01D 21/003 703/2
2013/0238256	A1 *	9/2013	Anup	G05B 23/0283 702/34

FOREIGN PATENT DOCUMENTS

JP	5145966	A	6/1993
JP	10061412	A	3/1998
JP	10187211	A	7/1998

(Continued)

OTHER PUBLICATIONS

IBM Personal Computer Brochure, International Business Machines Corporation, 1982, whole document.*

(Continued)

Primary Examiner — Mohammad Ali
Assistant Examiner — Bernard G Lindsay
(74) *Attorney, Agent, or Firm* — Fletcher Yoder, P.C.

(57) **ABSTRACT**

Systems and methods provided herein output an operational advisory based upon a plurality of models derived from a plurality of data, in which the plurality of models comprise at least one of a plant transfer function, a degradation contributor model, or a plant level cost model, and in which the plurality of data is derived from at least one of current plant data, historical plant data, business data, environmental data, component data, degradation contribution data, an optimization goal, or a combination thereof.
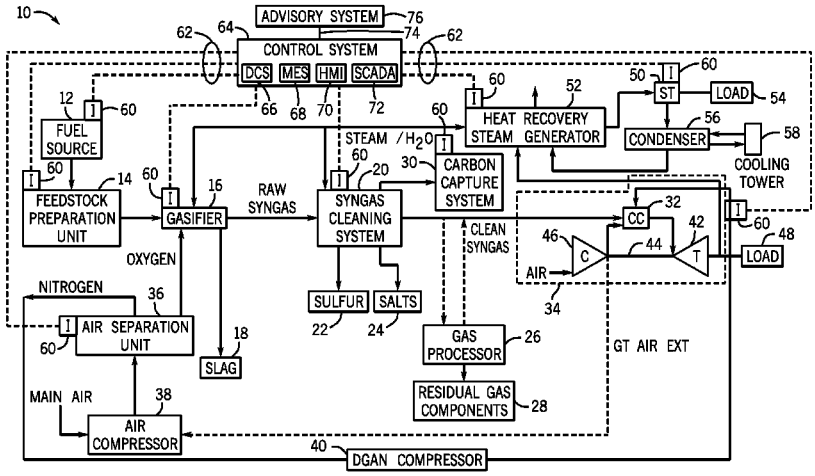
19 Claims, 5 Drawing Sheets