US009410526B2

(12) **United States Patent**
Sekine

(10) **Patent No.: US 9,410,526 B2**
(45) **Date of Patent: Aug. 9, 2016**

(54) **IGNITION DEVICE**

(71) Applicant: **SANKEN ELECTRIC CO., LTD.**, Niiza-Shi, Saitama (JP)

(72) Inventor: **Nobuaki Sekine**, Kawagoe (JP)

(73) Assignee: **SANKEN ELECTRIC CO., LTD.**, Niiza-Shi (JP)

(*) Notice: Subject to any disclaimer, the term of this patent is extended or adjusted under 35 U.S.C. 154(b) by 0 days.

(21) Appl. No.: **14/971,138**

(22) Filed: **Dec. 16, 2015**

(65) **Prior Publication Data**

US 2016/0201637 A1 Jul. 14, 2016

(30) **Foreign Application Priority Data**

Jan. 8, 2015 (JP) 2015-002226

(51) **Int. Cl.**
F02P 9/00 (2006.01)
F02P 15/12 (2006.01)

(52) **U.S. Cl.**
CPC ***F02P 15/12*** (2013.01)

(58) **Field of Classification Search**
USPC ..... 315/209 T–209 S; 123/606–644
See application file for complete search history.

(56) **References Cited**

U.S. PATENT DOCUMENTS

2008/0074054 A1* 3/2008 Kang ..... H05B 41/042 315/209 T

FOREIGN PATENT DOCUMENTS

JP 2001-217131 A 8/2001

* cited by examiner

Primary Examiner — Thuy Vinh Tran
Assistant Examiner — Jonathan Cooper
(74) *Attorney, Agent, or Firm* — Mots Law, PLLC

(57) **ABSTRACT**

An ignition coil includes a first winding, a second winding, and a third winding. A first switch is electronically connected to a first end of the first winding. A battery is electronically connected to a second end of the first winding. A booster with a first end electronically connected to the battery and a second end electronically connected to a first end of the third winding. A second switch is electronically connected to a second end of the third winding. A drive device is electrically connected to the first and the second switches, that turns the first and the second switch on and off. The drive device feeds a secondary current to the second winding by changing the first switch from an on-state to an off-state, and supplies an output from the booster to the third winding by changing the second switch from an off-state to an on-state.
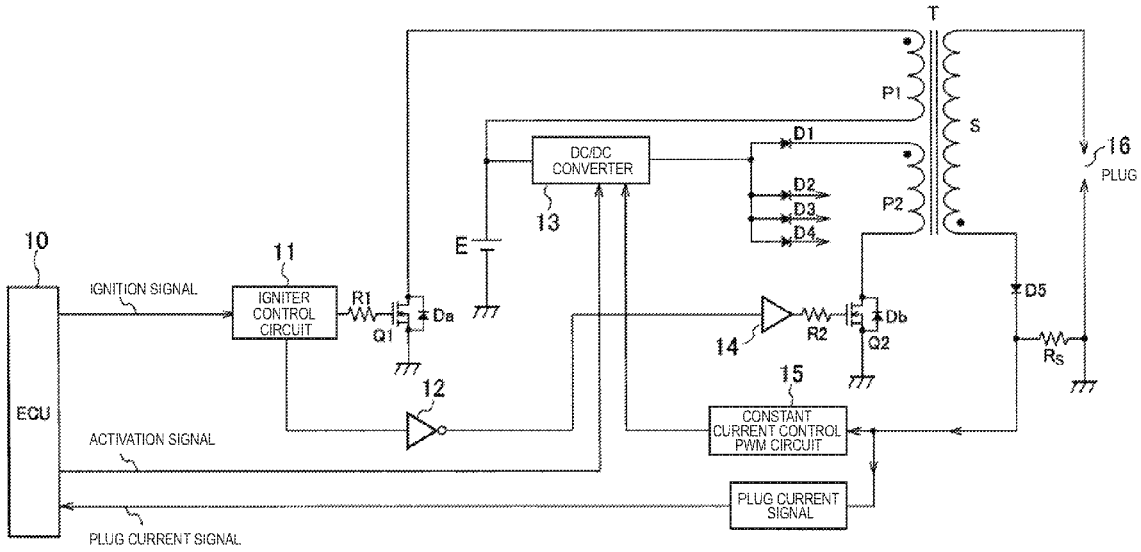
9 Claims, 6 Drawing Sheets