US009410326B2

(12) **United States Patent**
Albrecht et al.

(10) **Patent No.: US 9,410,326 B2**
(45) **Date of Patent: Aug. 9, 2016**

(54) **AWNING SYSTEM**

(71) Applicant: **LIPPERT COMPONENTS, INC.**, Elkhart, IN (US)

(72) Inventors: **Jeffrey K. Albrecht**, Goshen, IN (US); **Zachery B. Nelson**, Elkhart, IN (US); **Andrew J. Papczynski**, Middlebury, IN (US); **Brian M. Worthman**, Goshen, IN (US); **Michael J. Fiwek**, Plymouth, IN (US); **David G. Skinner**, Elkhart, IN (US); **Christopher S. Greer**, Syracuse, IN (US)

(73) Assignee: **LIPPERT COMPONENTS, INC.**, Elkhart, IN (US)

(*) Notice: Subject to any disclaimer, the term of this patent is extended or adjusted under 35 U.S.C. 154(b) by 0 days.

(21) Appl. No.: **14/527,234**

(22) Filed: **Oct. 29, 2014**

(65) **Prior Publication Data**

US 2015/0176285 A1 Jun. 25, 2015

Related U.S. Application Data

(60) Provisional application No. 61/897,563, filed on Oct. 30, 2013.

(51) **Int. Cl.**
E04F 10/06 (2006.01)

(52) **U.S. Cl.**
CPC ***E04F 10/0614*** (2013.01); ***E04F 10/0625*** (2013.01); ***E04F 10/0651*** (2013.01); *E04F 10/0629* (2013.01)

(58) **Field of Classification Search**
CPC E04F 10/0625; E04F 10/0629
USPC 160/67, 65, 69, 70, 71, 78, 79, 80; 135/88.12
See application file for complete search history.

(56) **References Cited**

U.S. PATENT DOCUMENTS

1,021,330	A *	3/1912	Price	E04F 10/0614	160/78
1,742,437	A *	1/1930	Davenport	E04F 10/0614	160/65
3,722,571	A *	3/1973	Knight	E04F 10/0614	135/88.11
3,736,976	A *	6/1973	Palmer	E04F 10/0614	160/242
6,095,221	A *	8/2000	Frey, Jr.	E04F 10/0614	135/88.12
6,341,638	B1 *	1/2002	Thompson	E04F 10/0614	160/67
6,488,069	B1 *	12/2002	Mashaw	E04F 10/0614	160/262
6,971,433	B2 *	12/2005	Wagner	E04F 10/0625	160/67
7,967,050	B2 *	6/2011	Gutierrez	E04F 10/0603	160/67

* cited by examiner

Primary Examiner — David Purol
(74) *Attorney, Agent, or Firm* — Barnes & Thornburg LLP

(57) **ABSTRACT**

A retractable awning system includes an awning and a support structure therefor. The support structure includes a base and first, second, and third support arms. The awning is attached to a roller connected to the third support arm and to another structure. A telescopic actuator coupled to the first and second support arms is configured to bias the first, second, and third support arms to a deployed state. The awning may be wound onto the roller. Tension in the awning resulting from the rolling process causes the support structure to transition to a collapsed position.
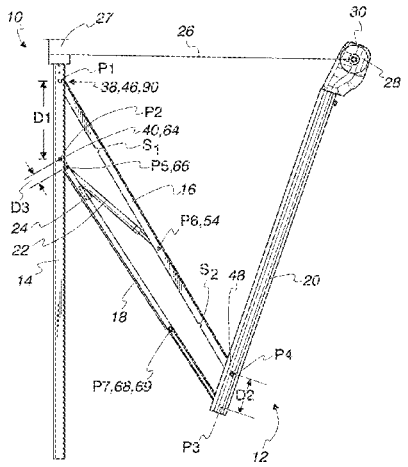
17 Claims, 5 Drawing Sheets