US009409526B2

(12) **United States Patent**
Giamatti

(10) **Patent No.: US 9,409,526 B2**
(45) **Date of Patent: Aug. 9, 2016**

(54) **CARGO CARRIER SYSTEMS FOR PASSENGER TRUCKS**

(71) Applicant: **Nicholas Joseph Giamatti**, Big Pin Key, FL (US)

(72) Inventor: **Nicholas Joseph Giamatti**, Big Pin Key, FL (US)

(*) Notice: Subject to any disclaimer, the term of this patent is extended or adjusted under 35 U.S.C. 154(b) by 9 days.

(21) Appl. No.: **14/539,954**

(22) Filed: **Nov. 12, 2014**

(65) **Prior Publication Data**

US 2015/0132090 A1 May 14, 2015

Related U.S. Application Data

(60) Provisional application No. 61/903,368, filed on Nov. 12, 2013.

(51) **Int. Cl.**
B60P 3/00 (2006.01)
B60R 9/042 (2006.01)
B60P 1/02 (2006.01)

(52) **U.S. Cl.**
CPC .. ***B60R 9/042*** (2013.01); ***B60P 1/02*** (2013.01)

(58) **Field of Classification Search**
CPC B60R 9/042; B60P 1/02
See application file for complete search history.

(56) **References Cited**

U.S. PATENT DOCUMENTS

2,741,383	A	4/1956	Leckert	
4,854,628	A	8/1989	Halberg	
4,953,757	A	9/1990	Stevens et al.	
5,281,075	A	1/1994	Tatman et al.	
5,586,856	A	12/1996	Springer	
5,609,462	A	3/1997	Reimer	
5,628,540	A	5/1997	James	
5,868,453	A *	2/1999	Steigner	B60P 3/40 296/100.1
5,924,835	A	7/1999	Ross	
6,099,232	A	8/2000	Dixon et al.	
6,637,793	B2 *	10/2003	Krause	B60R 9/00 224/403
6,644,704	B1	11/2003	Nyberg	
6,666,490	B1	12/2003	Thacker	
6,676,220	B2	1/2004	Mistler	
7,631,916	B1 *	12/2009	Coleman	B60P 3/40 296/3
7,758,091	B1	7/2010	McCall	
7,780,050	B2	8/2010	Tucker	
7,997,850	B2	8/2011	Hutchison	
8,113,562	B2	2/2012	Skoglun	
2004/0161322	A1	8/2004	Brachman et al.	
2006/0182544	A1	8/2006	Hurst	
2007/0258800	A1	11/2007	Mistler	
2008/0079277	A1	4/2008	Wethington	
2011/0127790	A1	6/2011	Mokhtari	
2011/0202199	A1	8/2011	Crane	
2012/0263561	A1	10/2012	Li	
2013/0062378	A1	3/2013	Hobbs	

* cited by examiner

Primary Examiner — Lori L Lyjak

(57) **ABSTRACT**

Disclosed is a system to assist hauling and loading of cargo above a passenger truck. The system has a forward frame and a rearward frame that are pivotally attached to the cargo area of the passenger truck. The frames tilt between an upright stowage position and a downward loading position. The frames are connected by a mechanical-advantage member to tilt the rearward frame faster than the forward frame when moving between the loading and stowage positions. Additionally, a spring, piston or other force facilitator device can be used to gain further mechanical advantage.
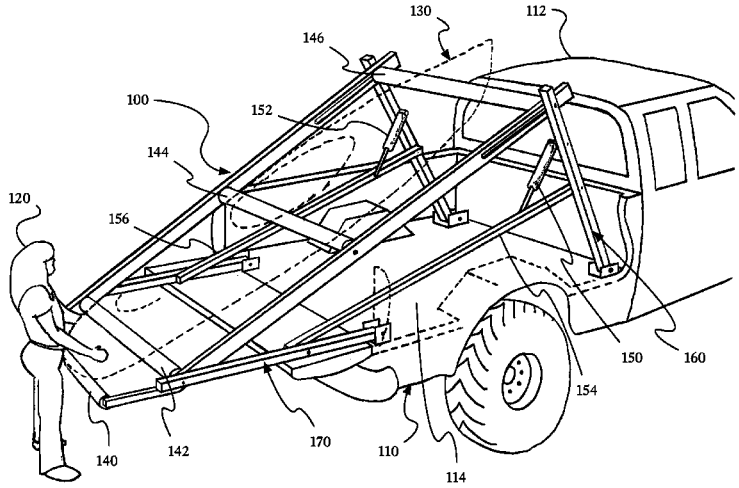
25 Claims, 8 Drawing Sheets