US009409226B2

(12) **United States Patent**
Koppensteiner

(10) **Patent No.: US 9,409,226 B2**
(45) **Date of Patent: Aug. 9, 2016**

(54) **APPARATUS FOR FORGING A HOLLOW BODY**

(75) Inventor: **Robert Koppensteiner**, Steyr (AT)

(73) Assignee: **GFM-GmbH**, Steyr (AT)

(*) Notice: Subject to any disclaimer, the term of this patent is extended or adjusted under 35 U.S.C. 154(b) by 196 days.

(21) Appl. No.: **13/548,556**

(22) Filed: **Jul. 13, 2012**

(65) **Prior Publication Data**

US 2013/0036785 A1 Feb. 14, 2013

(30) **Foreign Application Priority Data**

Aug. 12, 2011 (AT) ..... A 1171/2011

(51) **Int. Cl.**
B21J 7/14 (2006.01)
B21J 13/00 (2006.01)

(52) **U.S. Cl.**
CPC ... ***B21J 7/14*** (2013.01); ***B21J 13/00*** (2013.01)

(58) **Field of Classification Search**
CPC B21C 25/04; B21C 25/08; B21C 3/16; B21J 7/14–7/16; B21D 37/04
USPC 72/95–97, 209, 264, 370.01, 370.04, 72/398, 76; 269/48.1
See application file for complete search history.

(56) **References Cited**

U.S. PATENT DOCUMENTS

1,638,633 A * 8/1927 Hinman B21D 22/025 72/478
1,654,536 A * 1/1928 Cotton A41D 1/06 72/478
1,683,573 A * 9/1928 Mueller B21D 9/03 72/478
4,131,988 A * 1/1979 Finegold 72/142
4,641,776 A * 2/1987 Vlasek et al. 72/393
5,500,995 A * 3/1996 Palmieri H05H 7/20 72/478
6,244,092 B1 * 6/2001 Grobbenhaar B21D 9/03 72/466
7,128,146 B2 * 10/2006 Baugh E21B 43/105 72/393
8,166,792 B2 * 5/2012 Prasser et al. 72/96
2007/0186604 A1 * 8/2007 Koppensteiner 72/97
2010/0075074 A1 * 3/2010 Wilson et al. 156/189
2010/0251794 A1 * 10/2010 Wiedenmaier et al. 72/264
2010/0263423 A1 * 10/2010 Baumer et al. 72/371

FOREIGN PATENT DOCUMENTS

AT 350 356 5/1979
DE 27 54 443 A1 6/1979
EP 116 A1 * 1/1979
GB 2 003 411 3/1979
JP 63 309347 A 12/1988

OTHER PUBLICATIONS

European Search Report in EP 12 17 3396, dated Dec. 4, 2012.

* cited by examiner

Primary Examiner — Shelley Self
Assistant Examiner — Pradeep C Battula
(74) *Attorney, Agent, or Firm* — Collard & Roe, P.C.

(57) **ABSTRACT**

An apparatus for forging a hollow body has forging tools which are arranged in a centrically symmetrical way about a forging axis, and a forging mandrel. The forging mandrel has a mandrel core and mandrel segments which are distributed over the circumference of the mandrel core, are exchangeably held on the mandrel core, and form forming surfaces for the hollow space of the hollow body.
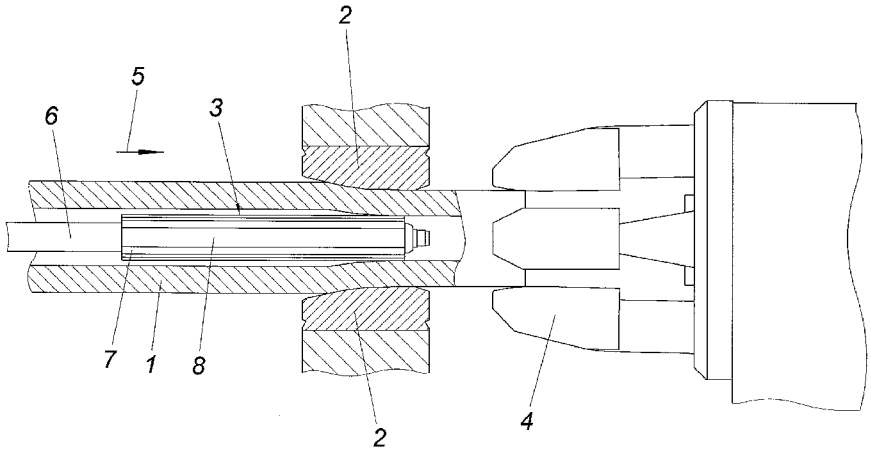
8 Claims, 5 Drawing Sheets