US009408726B2

(12) **United States Patent**
Rowe, Jr. et al.

(10) **Patent No.: US 9,408,726 B2**
(45) **Date of Patent: Aug. 9, 2016**

(54) **SYSTEM AND METHOD FOR SEALING PROSTHETIC SOCKET**

(71) Applicant: **The Ohio Willow Wood Company**, Mount Sterling, OH (US)

(72) Inventors: **Larry Gail Rowe, Jr.**, Williamsport, OH (US); **Lonnie LaVern Nolt**, Washington Court House, OH (US); **Jeffrey L. Doddroe**, Washington Court House, OH (US); **Jeffrey A. Denune**, Galloway, OH (US)

(73) Assignee: **THE OHIO WILLOW WOOD COMPANY**, Mt. Sterling, OH (US)

(*) Notice: Subject to any disclaimer, the term of this patent is extended or adjusted under 35 U.S.C. 154(b) by 13 days.

(21) Appl. No.: **14/341,430**

(22) Filed: **Jul. 25, 2014**

(65) **Prior Publication Data**

US 2016/0022441 A1 Jan. 28, 2016

(51) **Int. Cl.**
A61F 2/80 (2006.01)

(52) **U.S. Cl.**
CPC ***A61F 2/80*** (2013.01); *A61F 2002/805* (2013.01)

(58) **Field of Classification Search**
CPC A61F 2/80; A61F 2002/802; A61F 2002/805
See application file for complete search history.

(56) **References Cited**

U.S. PATENT DOCUMENTS

2,696,011	A	12/1954	Galdik	
4,634,446	A *	1/1987	Kristinsson	A61F 2/80 623/33
4,908,037	A	3/1990	Ross	
5,314,497	A	5/1994	Fay et al.	
5,376,131	A	12/1994	Lenze et al.	
5,735,906	A	4/1998	Caspers	
5,904,722	A	5/1999	Caspers	
6,361,568	B1	3/2002	Hoerner	
7,448,407	B2	11/2008	Alley et al.	
7,631,657	B2	12/2009	Alley et al.	
7,632,315	B2	12/2009	Egilsson	
7,850,739	B2	12/2010	Perkins et al.	
8,343,233	B2	1/2013	Perkins et al.	
8,394,150	B2	3/2013	Laghi	
8,758,449	B2	6/2014	Caspers	
2008/0221705	A1 *	9/2008	Scussel	A61F 2/80 623/32
2010/0312360	A1	12/2010	Caspers	
2014/0058529	A1	2/2014	Schober et al.	
2014/0067084	A1	3/2014	Soss et al.	
2014/0067085	A1 *	3/2014	Doddroe	A61F 2/78 623/36
2014/0277585	A1	9/2014	Kelley et al.	
2014/0379097	A1	12/2014	Hurley et al.	
2015/0051711	A1 *	2/2015	Egilsson	A61F 2/80 623/33

* cited by examiner

Primary Examiner — Bruce E Snow
(74) *Attorney, Agent, or Firm* — Benesch, Friedlander, Coplan & Aronoff LLP

(57) **ABSTRACT**

Various embodiments of a system and method for sealing a prosthetic socket are disclosed. One example socket sealing system may comprise: a prosthetic socket having a proximal end, an expanded section, and an internal peripheral shoulder; a brim seal having an inner proximal end, an outer proximal end, and a distal end; a removable brim having a distal end; a liner; and a wicking sock; wherein prosthetic socket may be oriented radially outwardly of the outer proximal end of the brim seal, the outer proximal end of the brim seal may be oriented radially outwardly of the removable brim, the removable brim may be oriented radially outwardly of the inner proximal end of the brim seal, the inner proximal end of the brim seal may be oriented radially outwardly of the wicking sock, and the wicking sock may be oriented radially outwardly of the liner; and wherein the brim seal may be reflected about the distal end of the removable brim.
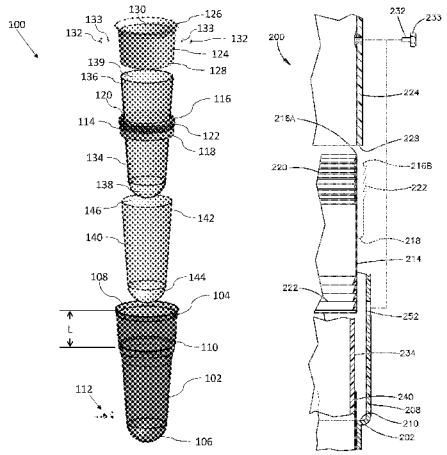
8 Claims, 13 Drawing Sheets