US007398725B2

(12) **United States Patent**
Rebordosa et al.

(10) **Patent No.: US 7,398,725 B2**
(45) **Date of Patent: Jul. 15, 2008**

(54) **METERING POWDERY, FLAKY OR FINE-GRAINED DOSING MATERIAL**

(75) Inventors: **Antonio Rebordosa**, Sant Fruitos de Bages(Barcelona) (ES); **Guillermo San Roman**, Barcelona (ES); **Jorge Sanjuan**, Barcelona (ES)

(73) Assignee: **Braun GmbH**, Kronberg (DE)

(*) Notice: Subject to any disclaimer, the term of this patent is extended or adjusted under 35 U.S.C. 154(b) by 0 days.

(21) Appl. No.: **11/437,290**

(22) Filed: **May 19, 2006**

(65) **Prior Publication Data**

US 2006/0261095 A1 Nov. 23, 2006

Related U.S. Application Data

(63) Continuation of application No. PCT/EP2004/011841, filed on Oct. 20, 2004.

(30) **Foreign Application Priority Data**

Nov. 19, 2003 (DE) 103 54 003

(51) **Int. Cl.**
A47J 31/00 (2006.01)
G01F 11/00 (2006.01)

(52) **U.S. Cl.** ..... **99/289 R**; 222/361

(58) **Field of Classification Search** ..... 99/289 R, 99/289 P, 289 D; 222/361, 388, 234
See application file for complete search history.

(56) **References Cited**

U.S. PATENT DOCUMENTS

2,755,000	A	7/1956	Parre	
3,759,162	A *	9/1973	Maxwell	99/289 R
4,366,920	A	1/1983	Greenfield et al.	
4,964,546	A *	10/1990	Morrow et al.	222/352
5,680,809	A *	10/1997	Dings et al.	99/289 D
5,722,313	A *	3/1998	Schmed	99/289 R
5,803,673	A	9/1998	Reinsch	
5,816,455	A *	10/1998	Alpers et al.	222/388
6,988,444	B1 *	1/2006	Pfeifer et al.	99/286

FOREIGN PATENT DOCUMENTS

DE	38 10 143	5/1989
DE	198 32 413	1/2000
GB	678872	9/1952

* cited by examiner

Primary Examiner—Reginald L Alexander
(74) *Attorney, Agent, or Firm*—Fish & Richardson P.C.

(57) **ABSTRACT**

Metering Powdery or Flaky or Fine-Grained Dosing Material, such as Coffee Powder, Milk Powder or Cocoa Powder by use of a metering device having a container for accommodating the dosing material, and a metering chamber for metering one portion of the dosing material arranged at the outlet of the container. The dosing material is discharged into a collecting receptacle via a discharge port each time an actuating element is actuated. The dosing material is acted upon by an air current generated by a blower during its metered discharge.
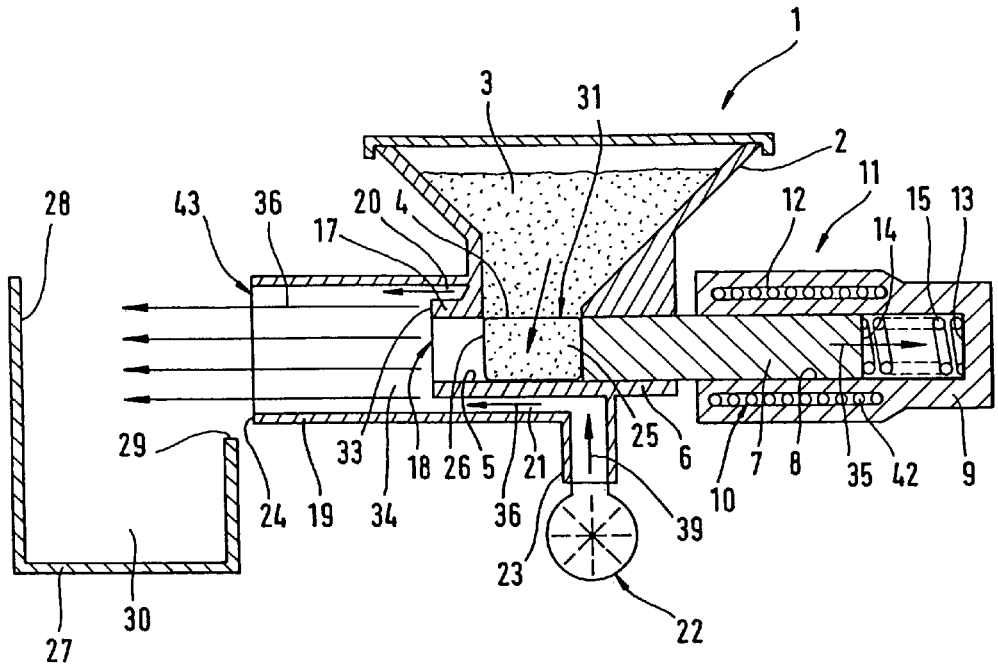
12 Claims, 1 Drawing Sheet