Feb. 12, 1952 G. H. CARLSON 2,585,225

PROCESS FOR HYDROLYZING LACTALBUMIN

Filed Aug. 23, 1947

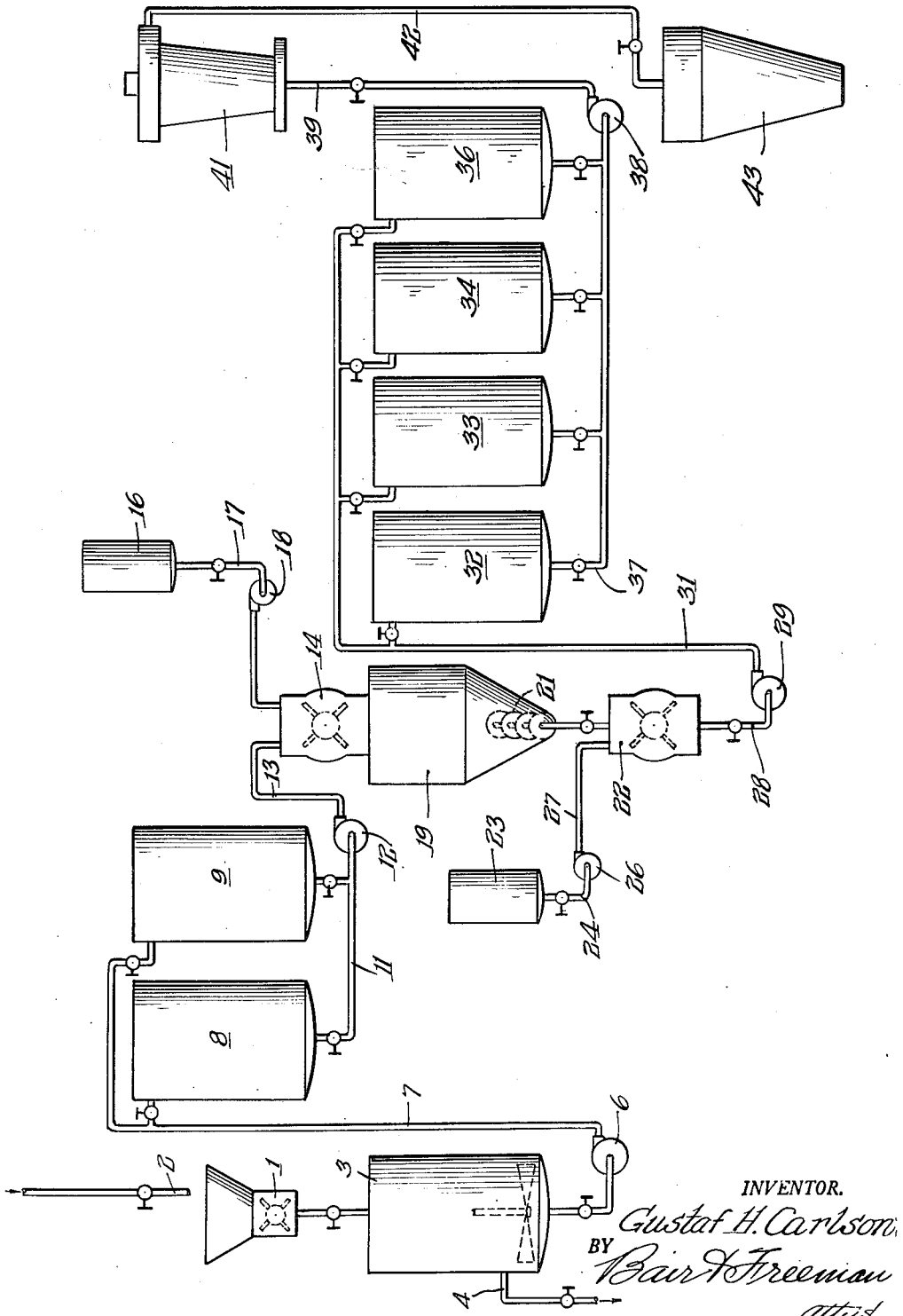

INVENTOR.
Gustaf H. Carlson
BY
Bair & Freeman
attys.