FIG. 1

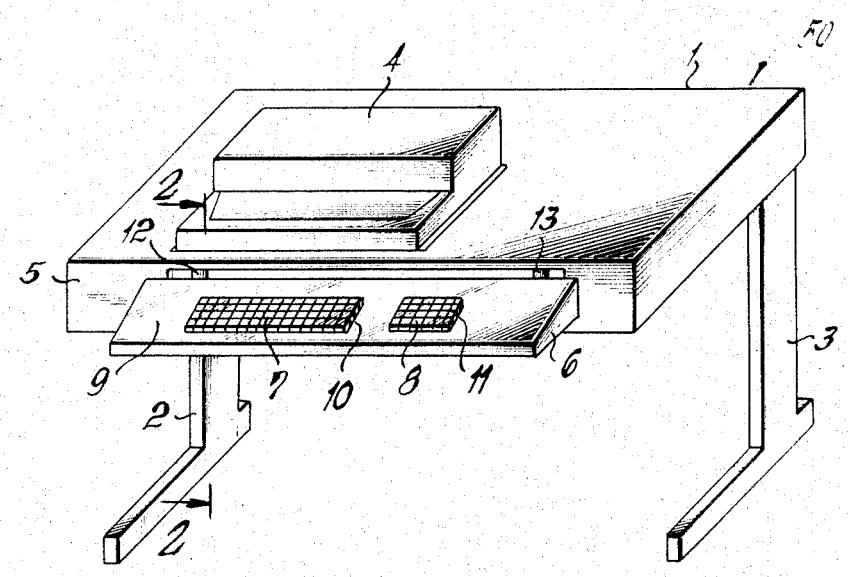

FIG. 2

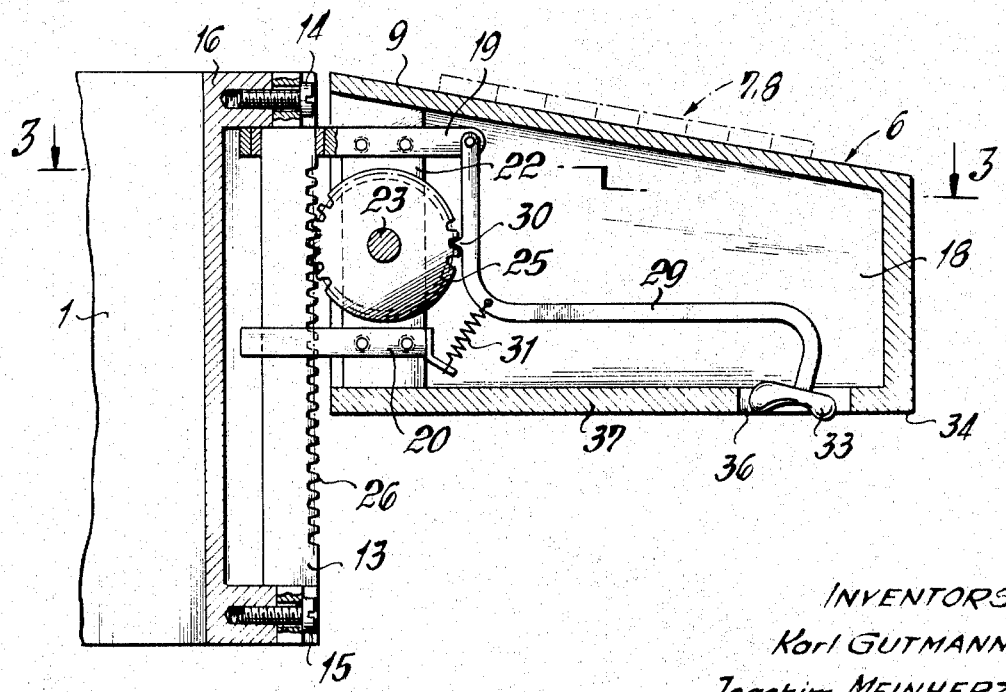

INVENTORS
Karl GUTMANN jr.
Joachim MEINHERZ
BY
John J. McGlew
their ATTORNEY