US008873225B2

(12) **United States Patent**
Huitema et al.

(10) **Patent No.: US 8,873,225 B2**
(45) **Date of Patent: Oct. 28, 2014**

(54) **ELECTRONIC APPARATUS WITH A FLEXIBLE DISPLAY HAVING A BODY ENABLING FURTHER FUNCTIONALITY**

(75) Inventors: **Hjalmar Edzer Ayco Huitema**, Veldhoven (NL); **Volker Barnhart Verschoor**, Delft (NL); **Rik Kruidhof**, Eindhoven (NL)

(73) Assignee: **Creator Technology B.V.**, Breda (NL)

(*) Notice: Subject to any disclaimer, the term of this patent is extended or adjusted under 35 U.S.C. 154(b) by 1022 days.

(21) Appl. No.: **12/989,339**

(22) PCT Filed: **Apr. 22, 2009**

(86) PCT No.: **PCT/NL2009/050212**

§ 371 (c)(1),
(2), (4) Date: **Feb. 24, 2011**

(87) PCT Pub. No.: **WO2009/131447**

PCT Pub. Date: **Oct. 29, 2009**

(65) **Prior Publication Data**

US 2011/0148797 A1 Jun. 23, 2011

Related U.S. Application Data

(60) Provisional application No. 61/047,037, filed on Apr. 22, 2008.

(51) **Int. Cl.**

H05K 5/00	(2006.01)
G06F 1/16	(2006.01)
G09F 9/30	(2006.01)

(52) **U.S. Cl.**

CPC ***G06F 1/1656*** (2013.01); ***G09F 9/301*** (2013.01); ***G06F 1/1615*** (2013.01); ***G06F 1/1652*** (2013.01); ***G06F 1/1643*** (2013.01)

USPC . **361/679.01**; 345/168; 345/169; 361/679.03; 361/679.09; 361/679.11; 361/679.15; 361/679.2

(58) **Field of Classification Search**

USPC 345/168, 169, 173; 361/679.01, 679.03, 361/679.09, 679.11, 679.15, 679.2, 679.32

See application file for complete search history.

(56) **References Cited**

U.S. PATENT DOCUMENTS

4,919,259 A * 4/1990 Beaulieu 206/45.2
6,016,176 A * 1/2000 Kim et al. 349/84

(Continued)

FOREIGN PATENT DOCUMENTS

EP 1 635 313 A 3/2006
JP H11-283440 10/1999

(Continued)

OTHER PUBLICATIONS

International Search Report dated Sep. 17, 2009 for PCT/NL2009/050212.

(Continued)

Primary Examiner — Robert J Hoffberg
Assistant Examiner — Hung Dang

(57) **ABSTRACT**

The invention relates to an electronic apparatus **10** comprising a body **14** about which a collapsible flexible display **16** is wrapped. In accordance with the invention the body **14** comprises an area **16***a* on which the flexible display is conceived to overlay in its extended state. This area may be provided with illumination unit for enabling a front illumination of the display in use and/or with a touch-sensitive area **13** for enabling touch functionality in use.
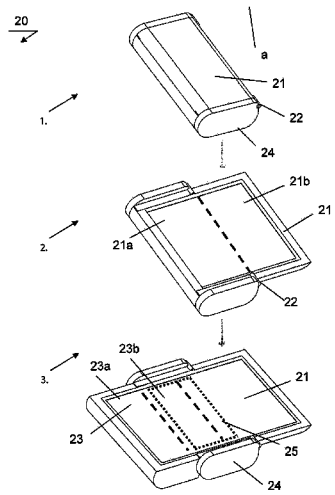
12 Claims, 8 Drawing Sheets