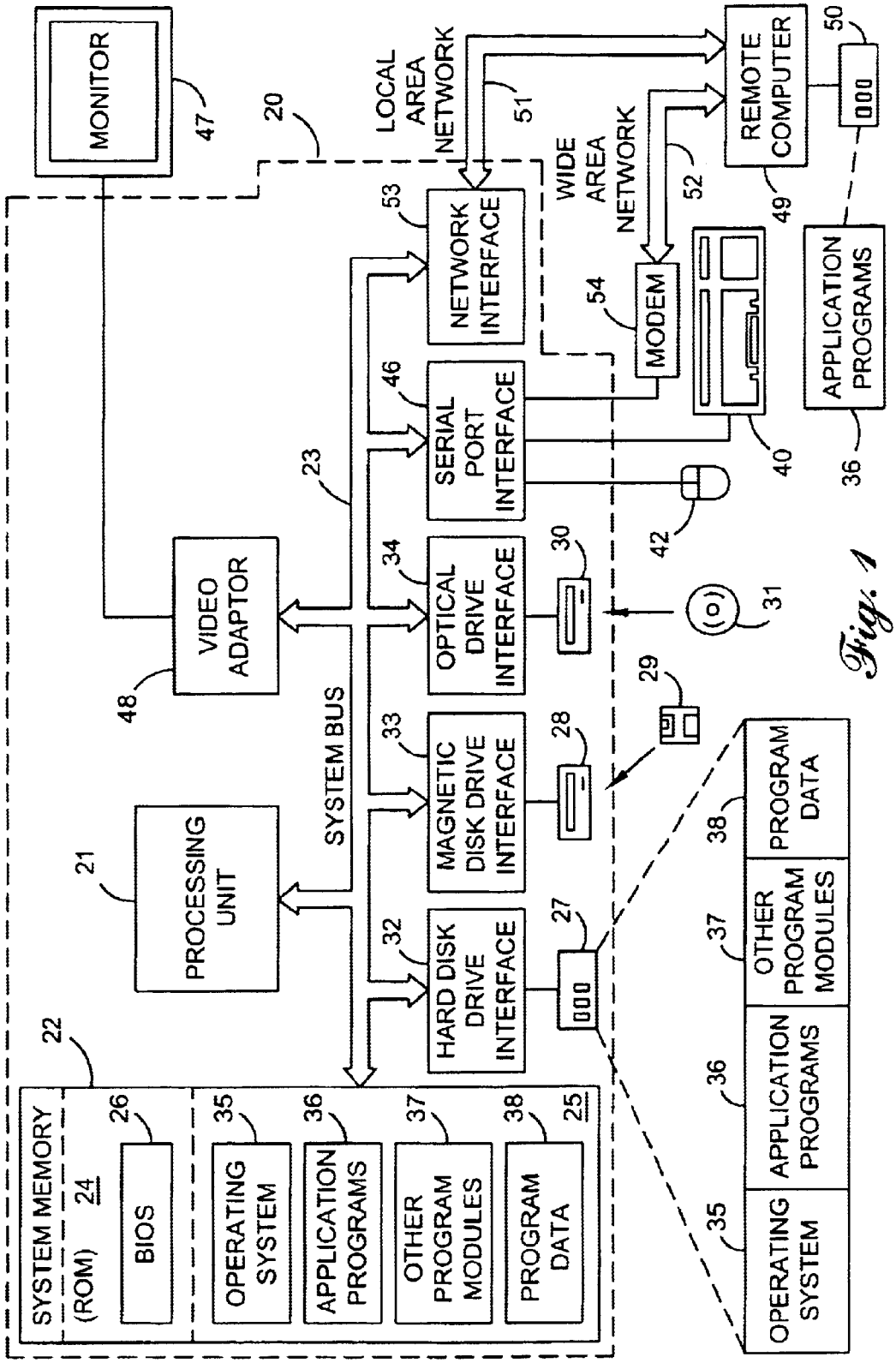
MONITOR
47
20
LOCAL AREA NETWORK
51
WIDE AREA NETWORK
52
REMOTE COMPUTER
49
50
53
NETWORK INTERFACE
54
MODEM
46
SERIAL PORT INTERFACE
40
APPLICATION PROGRAMS
36
23
42
34
OPTICAL DRIVE INTERFACE
30
31
VIDEO ADAPTOR
48
29
33
MAGNETIC DISK DRIVE INTERFACE
28
SYSTEM BUS
21
PROCESSING UNIT
32
HARD DISK DRIVE INTERFACE
27
22
SYSTEM MEMORY (ROM) 24
26
BIOS
35
OPERATING SYSTEM
36
APPLICATION PROGRAMS
37
OTHER PROGRAM MODULES
38
PROGRAM DATA
25
PROGRAM DATA
38
OTHER PROGRAM MODULES
37
APPLICATION PROGRAMS
36
OPERATING SYSTEM
35

Fig. 1