US00D559825S

(12) United States Design Patent

Park et al.

(10) Patent No.: US D559,825 S

(45) Date of Patent: ** Jan. 15, 2008

(54) **MOBILE PHONE**

(75) Inventors: **Jei-Sung Park**, Suwon-si (KR); **Min-Hyuk Lee**, Gumi-si (KR); **Chang-Hwan Hwang**, Goyang-si (KR)

(73) Assignee: **Samsung Electronics Co., Ltd.**, Suwon-Si (KR)

(**) Term: **14 Years**

(21) Appl. No.: **29/260,473**

(22) Filed: **May 26, 2006**

(30) **Foreign Application Priority Data**

Mar. 7, 2006 (KR) 30-2006-0008237

(51) **LOC (8) Cl.** **14-03**

(52) **U.S. Cl.** **D14/138**

(58) **Field of Classification Search** D14/496, D14/138, 341–347; 455/575.3, 575.1; D21/517, D21/329, 333

See application file for complete search history.

(56) **References Cited**

U.S. PATENT DOCUMENTS

D486,132	S *	2/2004	Jang	D14/138
D488,454	S *	4/2004	Lee	D14/138
D496,016	S *	9/2004	Hoo	D14/138
D497,353	S *	10/2004	Kim et al.	D14/138
D498,468	S *	11/2004	Seo	D14/138
D507,551	S *	7/2005	Kim et al.	D14/138
D521,480	S *	5/2006	Ou et al.	D14/138
D525,224	S *	7/2006	Pitt et al.	D14/138
D536,320	S *	2/2007	Michaels	D14/138
D543,172	S *	5/2007	Lee et al.	D14/138
7,212,845	B2 *	5/2007	Ikeuchi	455/575.3
D544,852	S *	6/2007	Takamori et al.	D14/138
D546,307	S *	7/2007	Lee	D14/138
2003/0125079	A1 *	7/2003	Park et al.	455/556
2004/0142721	A1 *	7/2004	Kim	455/550.1
2004/0224730	A1 *	11/2004	Sakai et al.	455/575.3
2005/0245296	A1 *	11/2005	Hong et al.	455/575.3
2005/0261040	A1 *	11/2005	Andersson et al.	455/575.3
2006/0019728	A1 *	1/2006	Sakamoto et al.	455/575.3
2006/0135225	A1 *	6/2006	Lin et al.	455/575.3
2006/0135226	A1 *	6/2006	Won et al.	455/575.3

OTHER PUBLICATIONS

Samsung Z620 telephone, announced Aug. 2006, [online], [retrieved on Jul. 19, 2007]. Retrieved from Internet , <URL: http://www.gsmarena.com>.*

Samsung E870 telephone, announced 1st quarter 2006, [online], [retrieved on Jul. 19, 2007]. Retrieved from Internet , <URL: http://www.gsmarena.com>.*

Samsung A500 telephone, announced 2002, [online], [retrieved on Jul. 19, 2007]. Retrieved from Internet , <URL: http://www.gsmarena.com>.*

Sharp 903 telephone, announced Jul. 2005, [online], [retrieved on Jul. 19, 2007]. Retrieved from Internet , <URL: http://www.gsmarena.com>.*

* cited by examiner

Primary Examiner—Jeffrey Asch

(74) *Attorney, Agent, or Firm*—Staas & Halsey LLP

(57) **CLAIM**

The ornamental design for the mobile phone, as shown and described.

DESCRIPTION

FIG. **1** is a perspective view of the mobile phone showing our design;

FIG. **2** is a front view thereof;

FIG. **3** is a rear view thereof;

FIG. **4** is a left side view thereof;

FIG. **5** is a right side view thereof;

FIG. **6** is a top plan view thereof;

FIG. **7** is a bottom plan view thereof; and,

FIG. **8** is a perspective, open view thereof.
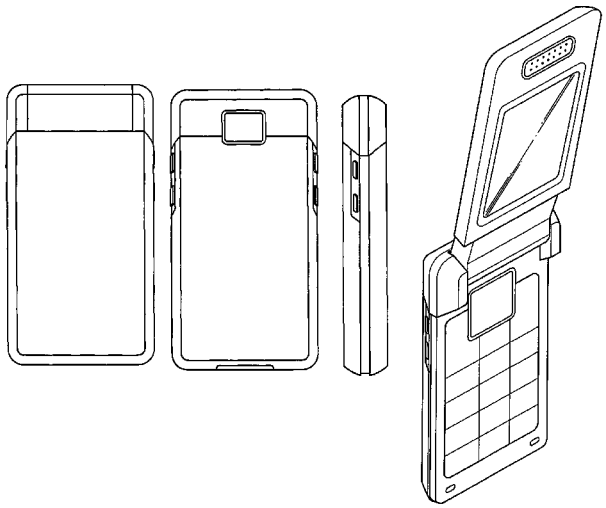
1 Claim, 3 Drawing Sheets