United States Patent [19]

Fernandez

[11] **Patent Number: 4,855,725**

[45] **Date of Patent: Aug. 8, 1989**

[54] **MICROPROCESSOR BASED SIMULATED BOOK**

[76] Inventor: **Emilio A. Fernandez,** 1019 Salt Meadow La., McLean, Va. 22101

[21] Appl. No.: **291,433**

[22] Filed: **Dec. 28, 1988**

Related U.S. Application Data

[63] Continuation of Ser. No. 124,593, Nov. 24, 1987, abandoned.

[51] **Int. Cl.**[4] **G09G 1/00**

[52] **U.S. Cl.** **340/706;** 40/365; 362/155; 358/194.1; 434/308; 434/317

[58] **Field of Search** 341/23, 31; 340/706, 340/802; 40/365, 571; 362/98, 99, 155; 364/410; 358/254, 194.1; 434/178, 307, 308, 317, 323, 365

[56] **References Cited**

U.S. PATENT DOCUMENTS

3,744,150	7/1973	Folson	434/178
4,002,355	1/1977	Sendor	434/317
4,159,417	6/1979	Rubincam	434/178
4,189,852	2/1980	Chatlien	434/178
4,209,824	6/1980	Kaufman	362/98
4,302,193	11/1981	Haynes	434/308
4,359,222	11/1982	Smith, III et al.	340/706
4,360,345	11/1982	Hon	434/323
4,363,081	12/1982	Wilbur	362/98
4,397,635	8/1983	Samuels	434/178
4,490,810	12/1984	Hon	364/410
4,555,859	12/1985	Corso	434/308
4,589,659	5/1986	Yokoi et al.	40/365
4,639,225	1/1987	Washizuka	358/254
4,656,469	4/1987	Oliver et al.	340/802
4,680,681	7/1987	Fisherman et al.	362/99
4,712,105	12/1987	Köhler	358/194.1
4,733,485	3/1988	Ozeki	40/365
4,745,397	3/1988	Langerbauer et al.	340/365 VL
4,755,883	7/1988	Uehira	358/194.1
4,914,275	12/1987	Engel et al.	434/178

FOREIGN PATENT DOCUMENTS

3036947	5/1982	Fed. Rep. of Germany	340/706
0129642	8/1983	Japan	340/706
1484250	9/1977	United Kingdom	434/308

Primary Examiner—David K. Moore
Assistant Examiner—M. Fatahiyar
Attorney, Agent, or Firm—Whitham and Marhoefer

[57] **ABSTRACT**

A user interactive mass storage data access system includes a personal computer (**10**) and a simulated book (**30**). A mass storage device, such as a compact disk (CD) read only memory (ROM) (**22**), is connected to the personal computer, and the computer and the simulated book are connected by an infrared (IR) data communications link including IR transceivers (**26, 48**). The simulated book includes a display screen (**34**) and a microprocessor (**43**) with memory (**44, 46**). The microprocessor is programmed for storing data received and decoded by its IR transceiver (**48**) in memory (**46**) and responsive to user input for displaying a page of data on the display screen. In addition, the microprocessor is programmed to cause its IR transceiver (**48**) to transmit to the IR transceiver (**26**) connected to the personal computer (**10**) a data request command, and the personal computer is in turn programmed to transmit data from the CD ROM (**22**) to the simulated book (**30**). Data can be loaded in the simulated book and accessed at a later time when out of the proximity of the personal computer.
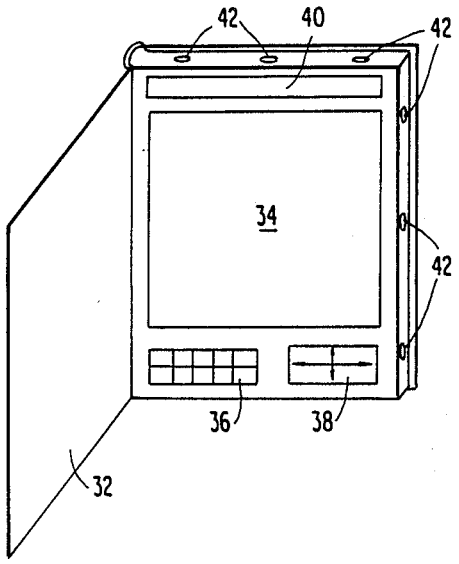
15 Claims, 4 Drawing Sheets