US009454025B2

(12) **United States Patent**
Zhong et al.

(10) **Patent No.: US 9,454,025 B2**
(45) **Date of Patent: Sep. 27, 2016**

(54) **DISPLAYS WITH REDUCED DRIVER CIRCUIT LEDGES**

(75) Inventors: **John Z. Zhong**, Cupertino, CA (US); **Cheng Chen**, San Jose, CA (US); **Shih-Chang Chang**, Cupertino, CA (US); **Victor H. Yin**, Cupertino, CA (US); **Shawn R. Gettemy**, San Jose, CA (US); **Wei Chen**, Palo Alto, CA (US)

(73) Assignee: **Apple Inc.**, Cupertino, CA (US)

(*) Notice: Subject to any disclaimer, the term of this patent is extended or adjusted under 35 U.S.C. 154(b) by 51 days.

(21) Appl. No.: **13/600,862**

(22) Filed: **Aug. 31, 2012**

(65) **Prior Publication Data**

US 2014/0063393 A1 Mar. 6, 2014

(51) **Int. Cl.**
G02F 1/1345 (2006.01)
G02F 1/133 (2006.01)

(52) **U.S. Cl.**
CPC ***G02F 1/13306*** (2013.01); ***G02F 1/13452*** (2013.01); *G02F 2201/42* (2013.01)

(58) **Field of Classification Search**
CPC G02F 1/13306; G02F 1/133
USPC 349/42
See application file for complete search history.

(56) **References Cited**

U.S. PATENT DOCUMENTS

2,933,655 A 4/1960 Gradisar et al.
4,066,855 A 1/1978 Zenk
4,085,302 A 4/1978 Zenk et al.
4,431,270 A 2/1984 Funada
4,487,993 A 12/1984 Becker
4,549,174 A 10/1985 Funada
5,235,451 A 8/1993 Bryan
5,276,382 A 1/1994 Stocker et al.
5,436,744 A * 7/1995 Arledge et al. 349/150
5,483,261 A 1/1996 Yasutake
5,488,204 A 1/1996 Mead et al.
5,493,096 A 2/1996 Koh
5,577,205 A 11/1996 Hwang et al.

(Continued)

FOREIGN PATENT DOCUMENTS

CN 1912716 2/2007
CN 101430473 5/2009

(Continued)

OTHER PUBLICATIONS

Drzaic et al., U.S. Appl. No. 13/253,844, filed Oct. 5, 2011.

Primary Examiner — Paisley L Arendt
Assistant Examiner — Edmond Lau
(74) *Attorney, Agent, or Firm* — Treyz Law Group, P.C.; G. Victor Treyz; Zachary D. Hadd

(57) **ABSTRACT**

An electronic device display may have a color filter layer, a thin-film-transistor layer, and a layer of liquid crystal material. The display may have a display cover layer such as a layer of glass or plastic. Adhesive may be used to attach the upper polarizer to the display cover layer. The thin-film transistor layer may have a substrate with upper and lower surfaces. Thin-film-transistor circuitry may be formed on the upper surface. A display driver integrated circuit may be mounted to the lower surface or a flexible printed circuit and may be coupled to the thin-film-transistor circuitry using wire bonding wires. Through vias that are formed through the thin-film-transistor layer substrate may be used in coupling the thin-film-transistor circuitry to the display driver integrated circuit.
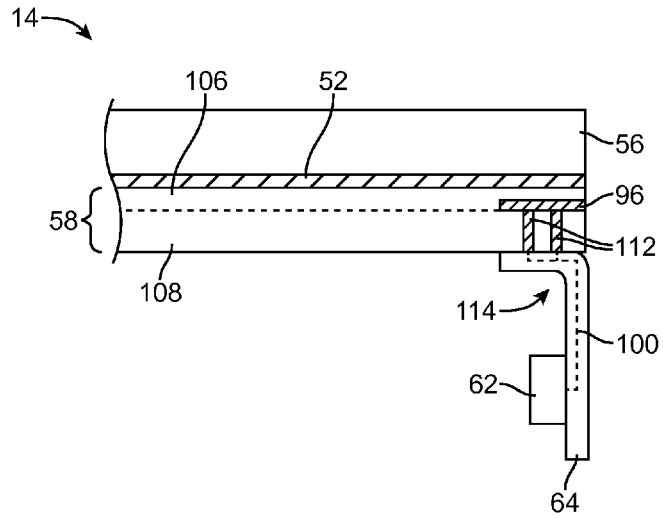
16 Claims, 8 Drawing Sheets