US00D748325S

(12) United States Design Patent
Leidel

(10) **Patent No.: US D748,325 S**
(45) **Date of Patent: ** Jan. 26, 2016**

(54) **PERSONAL VAPORIZER**

(71) Applicant: **The Hand Media, Inc.**, Miami, FL (US)

(72) Inventor: **Brandon Leidel**, Miami, FL (US)

(**) Term: **15 Years**

(21) Appl. No.: **29/537,090**

(22) Filed: **Aug. 21, 2015**

(51) **LOC (10) Cl.** **27-02**

(52) **U.S. Cl.**
USPC **D27/163**

(58) **Field of Classification Search**
USPC D27/101, 163, 167, 183, 186, 189; D14/191, 243, 198, 257; D10/40, 49, D10/50; D24/110; D23/360, 363, 366
CPC A24F 47/00; A24F 47/002; A24F 47/004; A24F 47/006; A24F 47/008
See application file for complete search history.

(56) **References Cited**

U.S. PATENT DOCUMENTS

6,814,083	B2 *	11/2004	Likness	A24F 47/00	131/330
D537,930	S *	3/2007	Nelson	D23/366	
D538,914	S *	3/2007	Nelson	D23/366	
D547,440	S *	7/2007	Louet-Feisser	D24/110	
D577,150	S *	9/2008	Bryman	D27/163	
D613,903	S	4/2010	Wu		
D644,725	S *	9/2011	Kim	D23/366	
D649,708	S	11/2011	Oneil		
D654,160	S *	2/2012	Yomtov	D23/360	
D656,094	S	3/2012	Wu		
D657,047	S	4/2012	Minskoff		
D664,636	S *	7/2012	Robinson	D23/360	
D666,355	S	8/2012	Alelov		
D675,777	S	2/2013	Wu		
D677,000	S	2/2013	Liu		
D683,899	S	6/2013	Liu		
D706,976	S	6/2014	Wu		
D708,727	S *	7/2014	Postma	D23/360	
D729,444	S *	5/2015	Leidel	D27/163	
D729,445	S *	5/2015	Leidel	D27/163	
D730,572	S *	5/2015	Leidel	D27/163	
D731,114	S *	6/2015	Leidel	D27/163	
D733,356	S *	6/2015	Leidel	D27/163	
2012/0255546	A1 *	10/2012	Goetz	A61M 11/041	128/202.21
2014/0196732	A1 *	7/2014	Liu	A24F 47/008	131/329
2014/0283824	A1 *	9/2014	Wheelock	A61M 11/041	128/202.21

* cited by examiner

Primary Examiner — Susan Bennett Hattan
Assistant Examiner — Janice Hallmark
(74) *Attorney, Agent, or Firm* — Christopher J. VanDam, P.A.; Chris Vandam

(57) **CLAIM**

The ornamental design for a personal vaporizer, as shown and described.

DESCRIPTION

FIG. **1** is a perspective view of a personal vaporizer.
FIG. **2** is a perspective view of the personal vaporizer.
FIG. **3** is a perspective view of the personal vaporizer.
FIG. **4** is an elevation view of the personal vaporizer.
FIG. **5** is an elevation view of the personal vaporizer.
FIG. **6** is an elevation view of the personal vaporizer.
FIG. **7** is a plan view of the personal vaporizer.
FIG. **8** is a plan view of the personal vaporizer.
FIG. **9** is an exploded elevation view of the personal vaporizer.
FIG. **10** is an exploded perspective view of the personal vaporizer.
FIG. **11** is an exploded perspective view of the personal vaporizer; and,
FIG. **12** is an exploded perspective view of the personal vaporizer.
The broken lines in the drawings depicting the word "vapor-shark" on the personal vaporizer form no part of the claimed design.
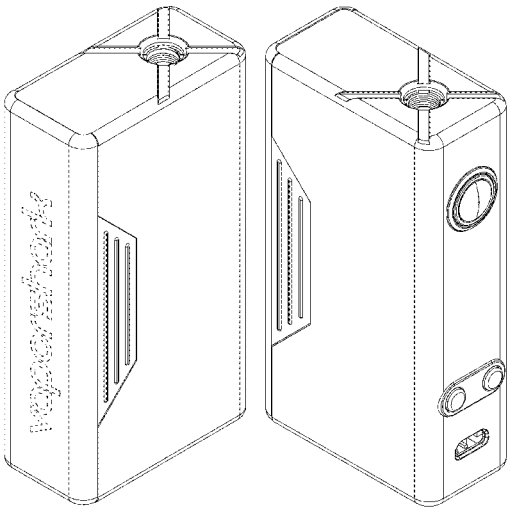
1 Claim, 12 Drawing Sheets