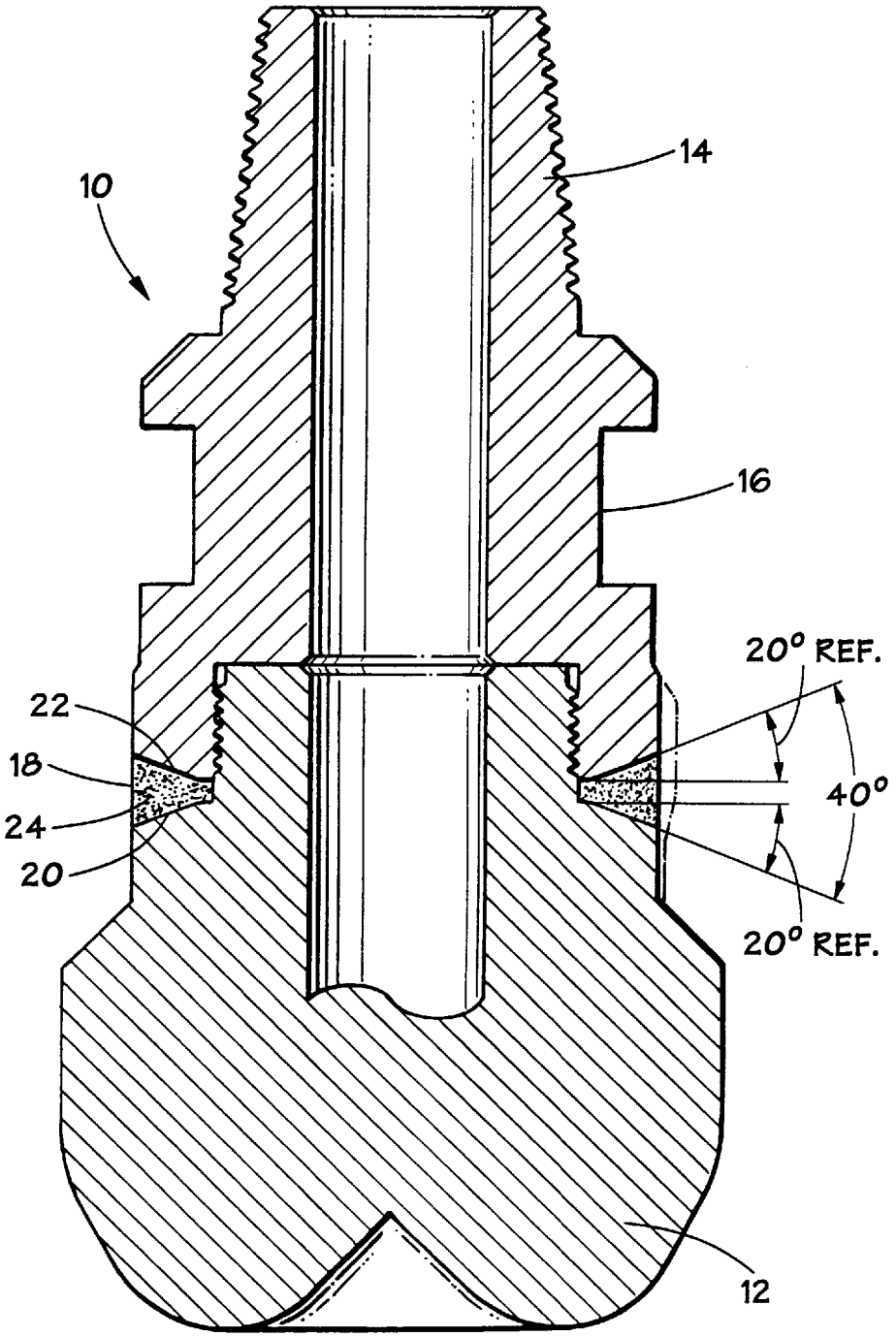

FIG.1
(PRIOR ART)