350-417 SR

XR 3,837,125

XR 1X40591

X4085N

Johnson

[11] 3,837,125

[45] Sept. 24, 1974

[54] METHOD ... SCHMIDT CORRECTOR LENSES

[75] Inventor: Thomas J. Johnson, Palos Verdes Estates, Calif.

[73] Assignee: Celestron Pacific, Torrance, Calif.

[22] Filed: Sept. 4, 1973

[21] Appl. No.: 393,846

[52] U.S. Cl. 51/284, 51/324

[51] Int. Cl. B24b 1/00, B24b 13/00

[58] Field of Search ..... 51/284, 324, 235, 281 R, 51/216 LP, 283

[56] References Cited

UNITED STATES PATENTS

3,210,894	10/1965	Bentley	51/284
3,465,481	9/1969	Szwarcman	51/324
3,685,216	8/1972	Frey	51/324 X
3,693,301	9/1972	Lemaitre	51/324 X
3,794,314	2/1974	Coburn	51/284 X

FOREIGN PATENTS OR APPLICATIONS

83,256	7/1971	E. Germany	51/284
[illegible]	[illegible]	Great Britain	51/284

OTHER PUBLICATIONS

Sakurai et al., Applied Optics, "Study of the Fabrication of Aspherical Surfaces," November, 1963, QC 350 A5

Primary Examiner—Donald G. Kelly

[57] ABSTRACT

A method and system for making Schmidt correctors wherein the surface of a master glass template is ground and polished to an accurate inverse curve of a corrector plate, a thin glass workpiece is placed under vacuum on the master glass template in intimate curve conformed glass-to-glass contact over the entire mating surfaces, the template and workpiece being conjointly rotated while grinding and polishing the upper free surface of the workpiece to a uniform accurate flatness whereafter the vacuum is released and the workpiece is removed from the template in final form.
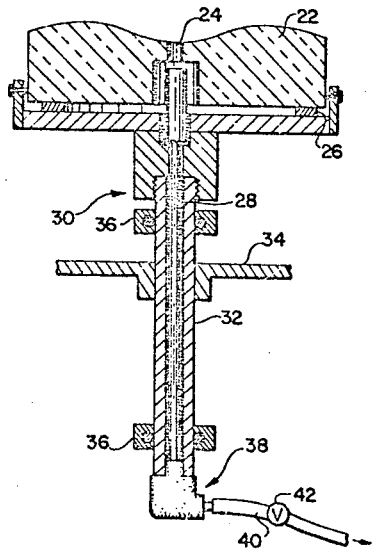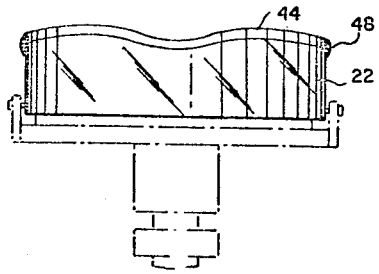
11 Claims, 11 Drawing Figures