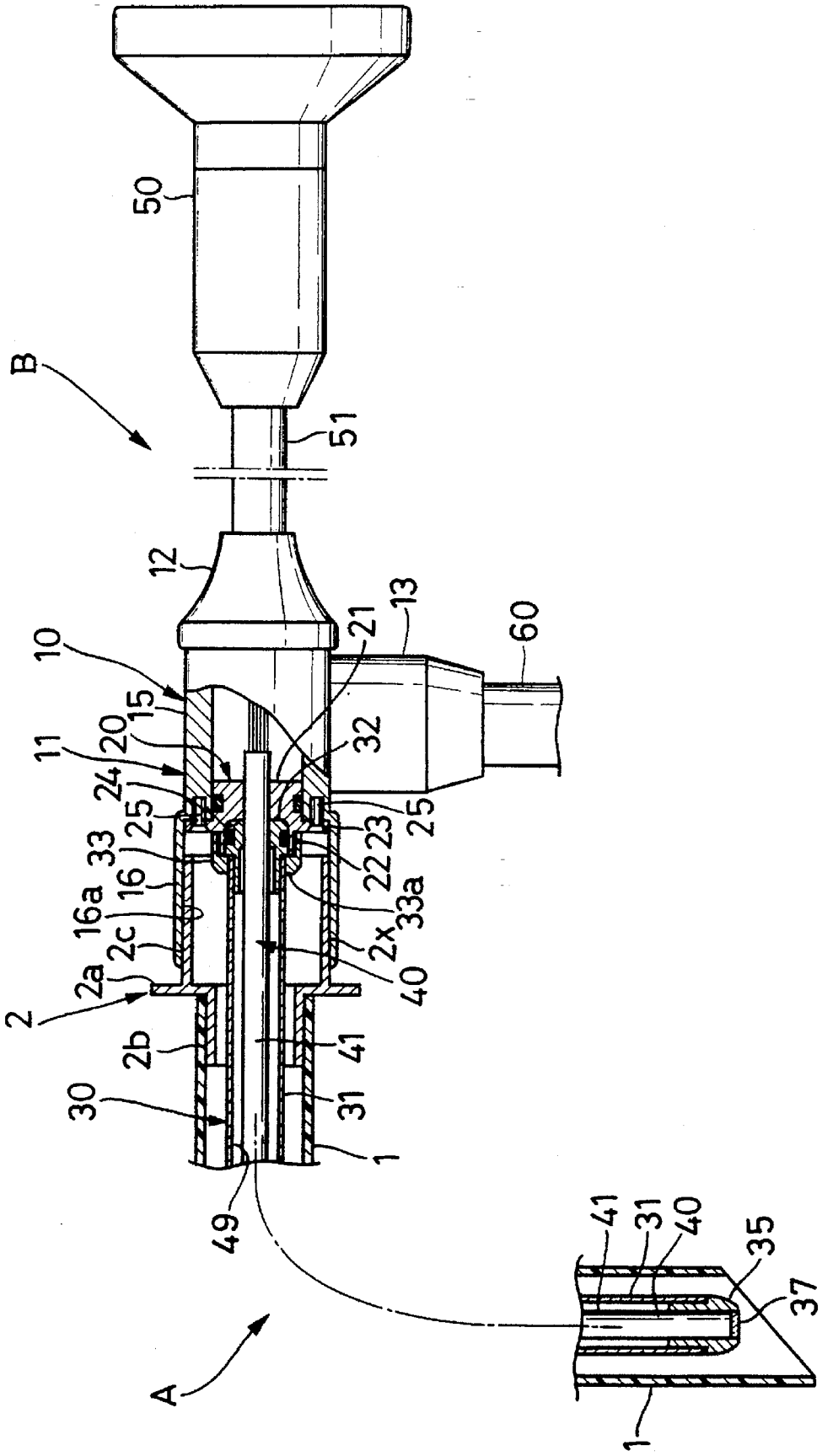
B
50
51
12
13
60
10
21
15
20
32
11
24
25
23
25
33
22
16
33a
16a
2c
2x
2a
40
2
2b
41
30
31
1
49
A
41
31
40
35
37
1

Fig. 1