United States Patent [19]

Swanson et al.

[11] **4,326,525**

[45] **Apr. 27, 1982**

[54] **OSMOTIC DEVICE THAT IMPROVES DELIVERY PROPERTIES OF AGENT IN SITU**

[75] Inventors: **David Swanson**, Palo Alto; **David Edgren**, El Granada, both of Calif.

[73] Assignee: **ALZA Corporation**, Palo Alto, Calif.

[21] Appl. No.: **196,219**

[22] Filed: **Oct. 14, 1980**

[51] **Int. Cl.**[3] **A61M 7/00**

[52] **U.S. Cl.** **128/260**; 424/19

[58] **Field of Search** 128/260, 261, 127; 424/15, 19

[56] **References Cited**

U.S. PATENT DOCUMENTS

4,058,122	11/1977	Theeuwes et al.	128/260
4,135,514	1/1979	Zaffaroni et al.	128/260
4,160,452	7/1979	Theeuwes	128/260
4,203,439	5/1980	Theeuwes	128/260
4,210,139	7/1980	Higuchi	128/260

Primary Examiner—C. Fred Rosenbaum

Attorney, Agent, or Firm—Paul L. Sabatine; Edward L. Mandell

[57] **ABSTRACT**

An osmotic device is disclosed that provides a means for improving the delivery properties of a beneficial agent in situ.
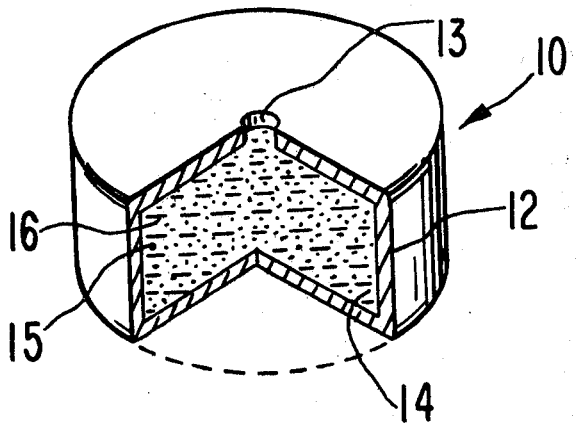
13 Claims, 5 Drawing Figures