US009410725B2

(12) **United States Patent**
Mitsubori

(10) **Patent No.: US 9,410,725 B2**
(45) **Date of Patent: Aug. 9, 2016**

(54) **REFRIGERATOR INSTALLING STRUCTURE**

(71) Applicant: **SUMITOMO HEAVY INDUSTRIES, LTD.**, Tokyo (JP)

(72) Inventor: **Hitoshi Mitsubori**, Kanagawa (JP)

(73) Assignee: **SUMITOMO HEAVY INDUSTRIES, LTD.**, Tokyo (JP)

(*) Notice: Subject to any disclaimer, the term of this patent is extended or adjusted under 35 U.S.C. 154(b) by 300 days.

(21) Appl. No.: **13/747,644**

(22) Filed: **Jan. 23, 2013**

(65) **Prior Publication Data**

US 2013/0192034 A1 Aug. 1, 2013

(30) **Foreign Application Priority Data**

Feb. 1, 2012 (JP) 2012-020017

(51) **Int. Cl.**

F25B 9/00	(2006.01)
F25B 41/04	(2006.01)
F25B 9/10	(2006.01)
F25D 19/00	(2006.01)

(52) **U.S. Cl.**

CPC . ***F25B 41/04*** (2013.01); ***F25B 9/10*** (2013.01); ***F25D 19/006*** (2013.01); *Y10T 29/53552* (2015.01)

(58) **Field of Classification Search**

CPC F25B 41/04; F25B 9/10; F25D 19/006; Y10T 29/53552; F16K 31/12

USPC 62/6, 51.1

See application file for complete search history.

(56) **References Cited**

U.S. PATENT DOCUMENTS

4,448,038	A *	5/1984	Barbier	62/212
5,944,285	A *	8/1999	Royer et al.	244/129.4
6,305,412	B1 *	10/2001	Steele	137/493.4
7,395,671	B2	7/2008	Miki	
2005/0166600	A1 *	8/2005	Mitsubori	62/6
2009/0193816	A1	8/2009	Clayton et al.	
2009/0277517	A1 *	11/2009	Mann	137/486

FOREIGN PATENT DOCUMENTS

JP	05-018622	1/1993
JP	H10-246547	9/1998
JP	2000-269022	9/2000
JP	2001-123951	5/2001
JP	3094239 U	6/2003
JP	2004-053068	2/2004
JP	2005-322756	11/2005
JP	2007-005573	1/2007
JP	2007-127298	5/2007
JP	2009-178552	8/2009

* cited by examiner

Primary Examiner — Marc Norman
Assistant Examiner — Ana Vazquez
(74) *Attorney, Agent, or Firm* — IPUSA, PLLC

(57) **ABSTRACT**

A disclosed refrigerator installing structure that enables a refrigerator including a cylinder and a displacer to be installed in a vacuum vessel in which an object to be cooled is accommodated, the displacer being removed from the cylinder during maintenance, the cylinder being movable inside a sleeve between a position at which the cylinder thermally contacts the sleeve and another position at which the cylinder does not thermally contact the sleeve includes a discharge mechanism configured to discharge a gas inside a space formed between the sleeve and the cylinder if a pressure inside the space becomes greater than or equal to a predetermined pressure.
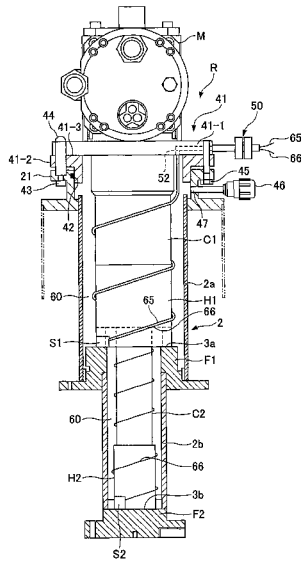
5 Claims, 5 Drawing Sheets