US009510625B2

(12) **United States Patent**
Henderson

(10) **Patent No.: US 9,510,625 B2**
(45) **Date of Patent: Dec. 6, 2016**

(54) **TWO-TAB CUFF CLOSURE**

(71) Applicant: **Cecelia Henderson**, Dumfries, VA (US)

(72) Inventor: **Cecelia Henderson**, Dumfries, VA (US)

(*) Notice: Subject to any disclaimer, the term of this patent is extended or adjusted under 35 U.S.C. 154(b) by 80 days.

(21) Appl. No.: **14/603,301**

(22) Filed: **Jan. 22, 2015**

(65) **Prior Publication Data**

US 2016/0213069 A1 Jul. 28, 2016

(51) **Int. Cl.**
A41B 7/02 (2006.01)
A44B 1/00 (2006.01)
A41B 7/00 (2006.01)

(52) **U.S. Cl.**
CPC .. ***A41B 7/02*** (2013.01); ***A44B 1/00*** (2013.01)

(58) **Field of Classification Search**
CPC A41B 7/02; A41B 7/04; A41B 7/12; A41B 7/00; A41D 27/10; A41D 15/002; A41D 27/08
See application file for complete search history.

(56) **References Cited**

U.S. PATENT DOCUMENTS

20,634 A 3/1891 Lewis
24,870 A 11/1895 Smock
1,465,625 A * 8/1923 Cragin A41B 7/04 2/123
2,428,158 A * 9/1947 Hermer A41B 7/02 2/124
3,111,682 A * 11/1963 Swinney A41D 27/10 2/270
3,137,861 A * 6/1964 Sanders A41B 7/04 2/123
D341,921 S * 12/1993 Trost D2/858
6,430,747 B1 * 8/2002 Lee A41B 7/00 2/123
7,380,287 B2 * 6/2008 DeSantis A41D 27/10 2/123
D576,377 S * 9/2008 Galasso D2/858
D576,378 S * 9/2008 Galasso D2/858
D584,883 S * 1/2009 Galasso D2/858
7,748,058 B2 * 7/2010 Steitle A41D 1/06 2/232
7,962,969 B1 * 6/2011 Blakely A41B 7/02 2/123
D640,859 S * 7/2011 Njoku D2/858
9,009,865 B2 * 4/2015 Gilreath A41B 7/02 2/123
9,009,866 B2 * 4/2015 Blakely A41B 7/10 2/124
2005/0172379 A1 * 8/2005 Bush A41B 11/125 2/123
2014/0090144 A1 * 4/2014 Gilreath A41B 7/02 2/69
2014/0165260 A1 * 6/2014 Harding A41B 7/12 2/123

OTHER PUBLICATIONS

"High 2 tabs cuff" Bivolino.com.

* cited by examiner

Primary Examiner — Bobby Muromoto, Jr.
(74) *Attorney, Agent, or Firm* — Richard C. Litman

(57) **ABSTRACT**

The two tab cuff closure is a closure for the sleeve(s) of a shirt. The two tabs are positioned on one edge of the cuff and will connect to fasteners that are positioned on the opposing cuff edge. The double tab design ensures that the cuff fabric will lay flat and not pucker or bulge. The tab structure arrangement could be adapted for utilization with cuff links or buttons.
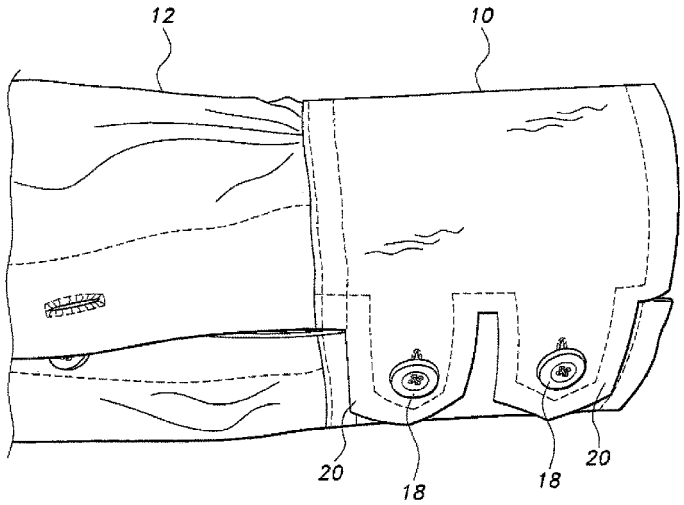
5 Claims, 4 Drawing Sheets